SINGER
99K26,K27,K28

Form K5992

ILLUSTRATED
LIST OF PARTS
FOR
Nos. 99K26 to 99K28
Machines

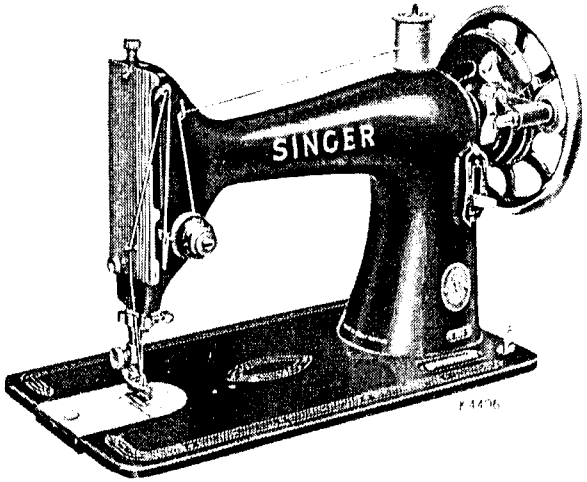

No. 99K26 Machine

**A Trade Mark of
THE SINGER MANUFACTURING COMPANY

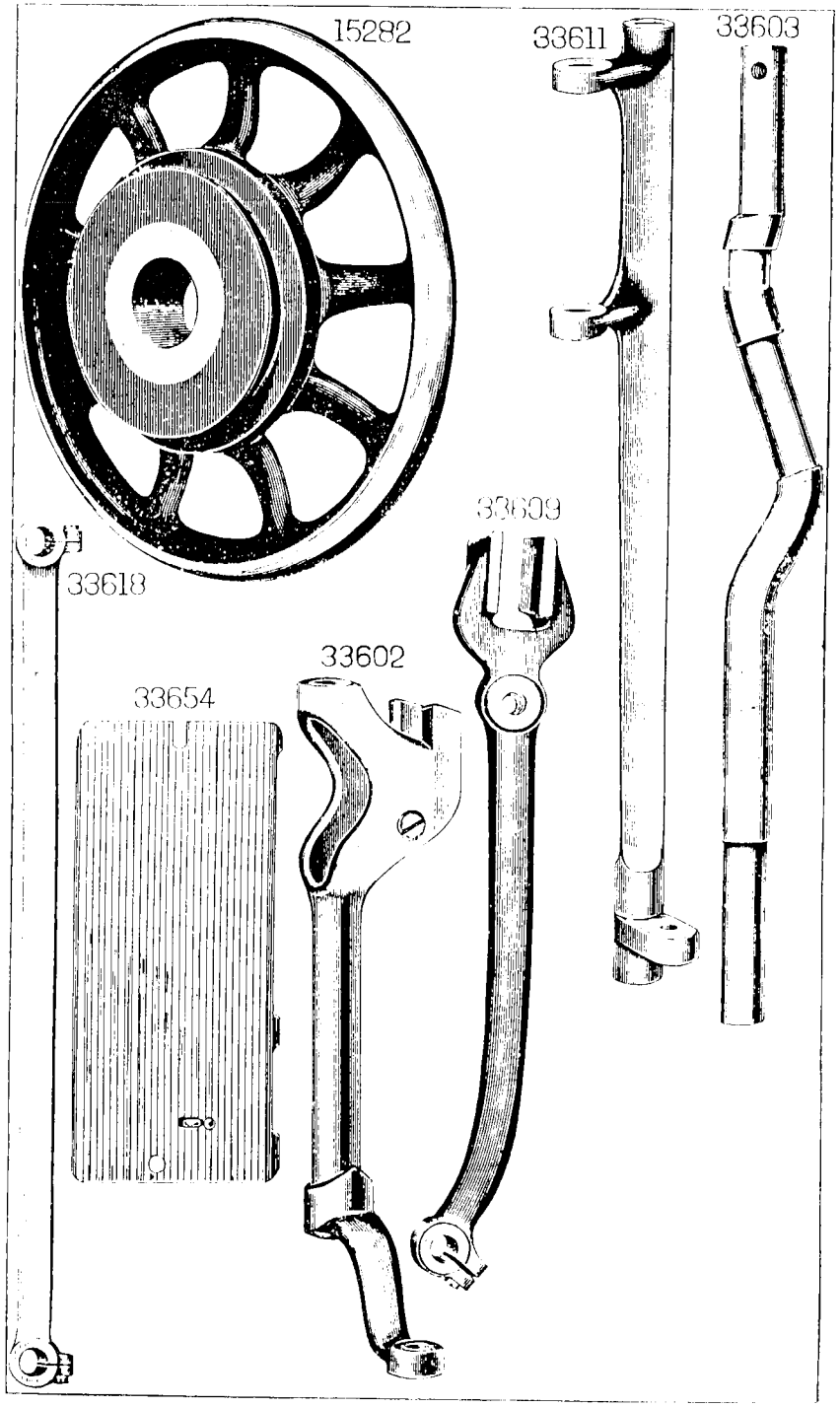
15282
33611
33603
33609
33618
33602
33654

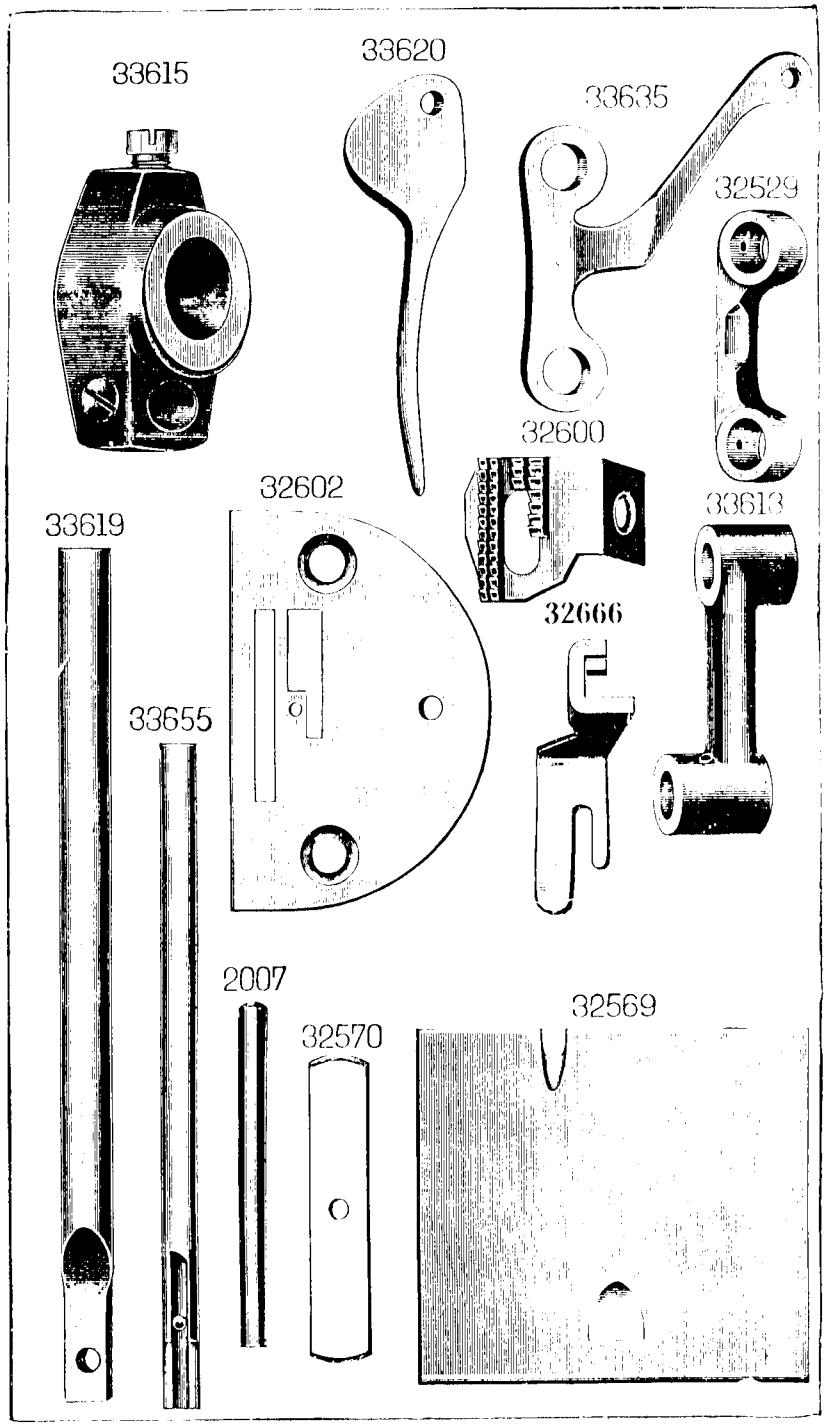
33615
33620
33635
32529
32600
32602
33619
33613
32666
33655
2007
32570
32569

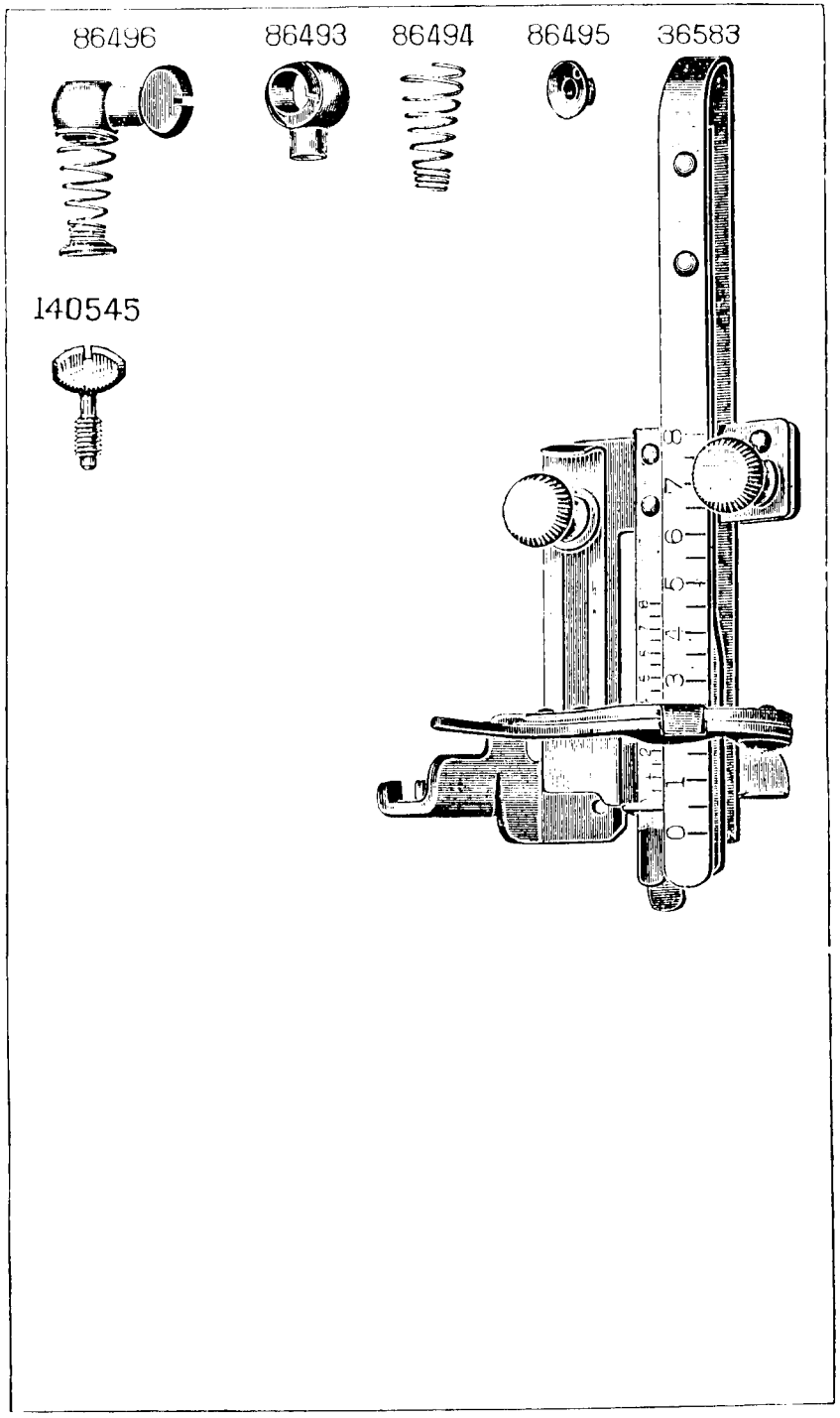
86496
86493
86494
86495
36583
140545

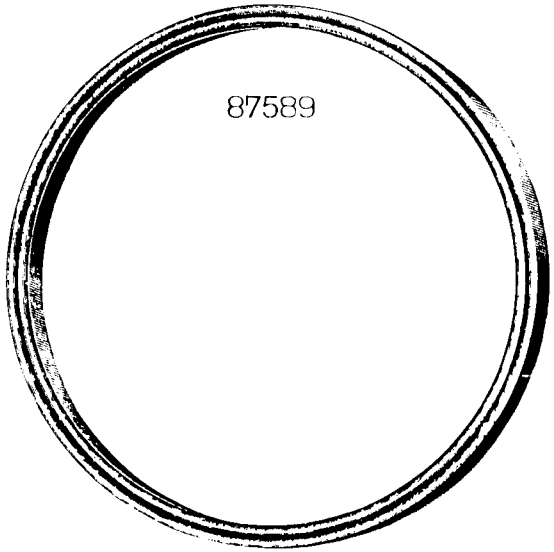
87589

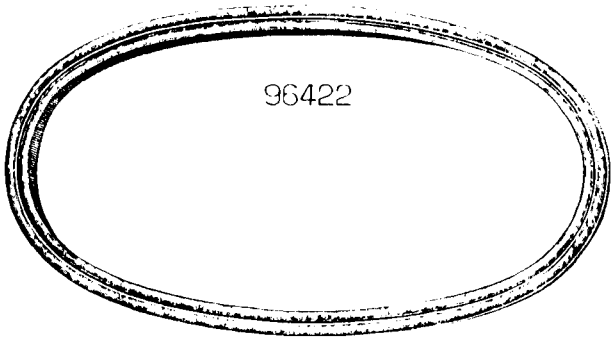
96422

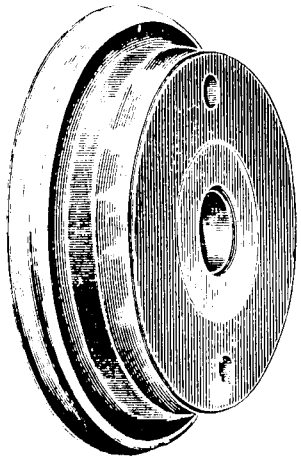
32672

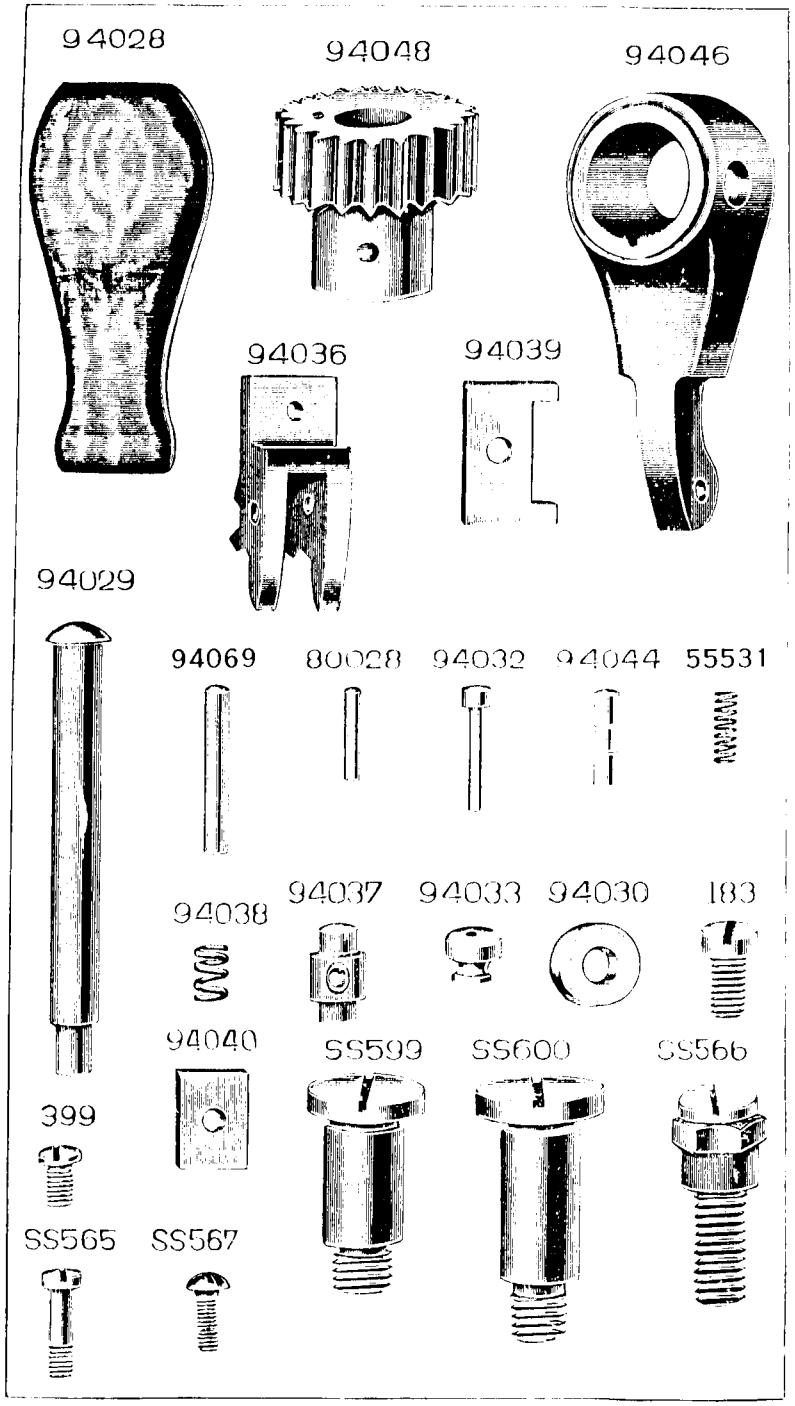
94028
94048
94046
94036
94039
94029
94069
80028
94032
94044
55531
94038
94037
94033
94030
183
94040
SS599
SS600
SS566
399
SS565
SS567

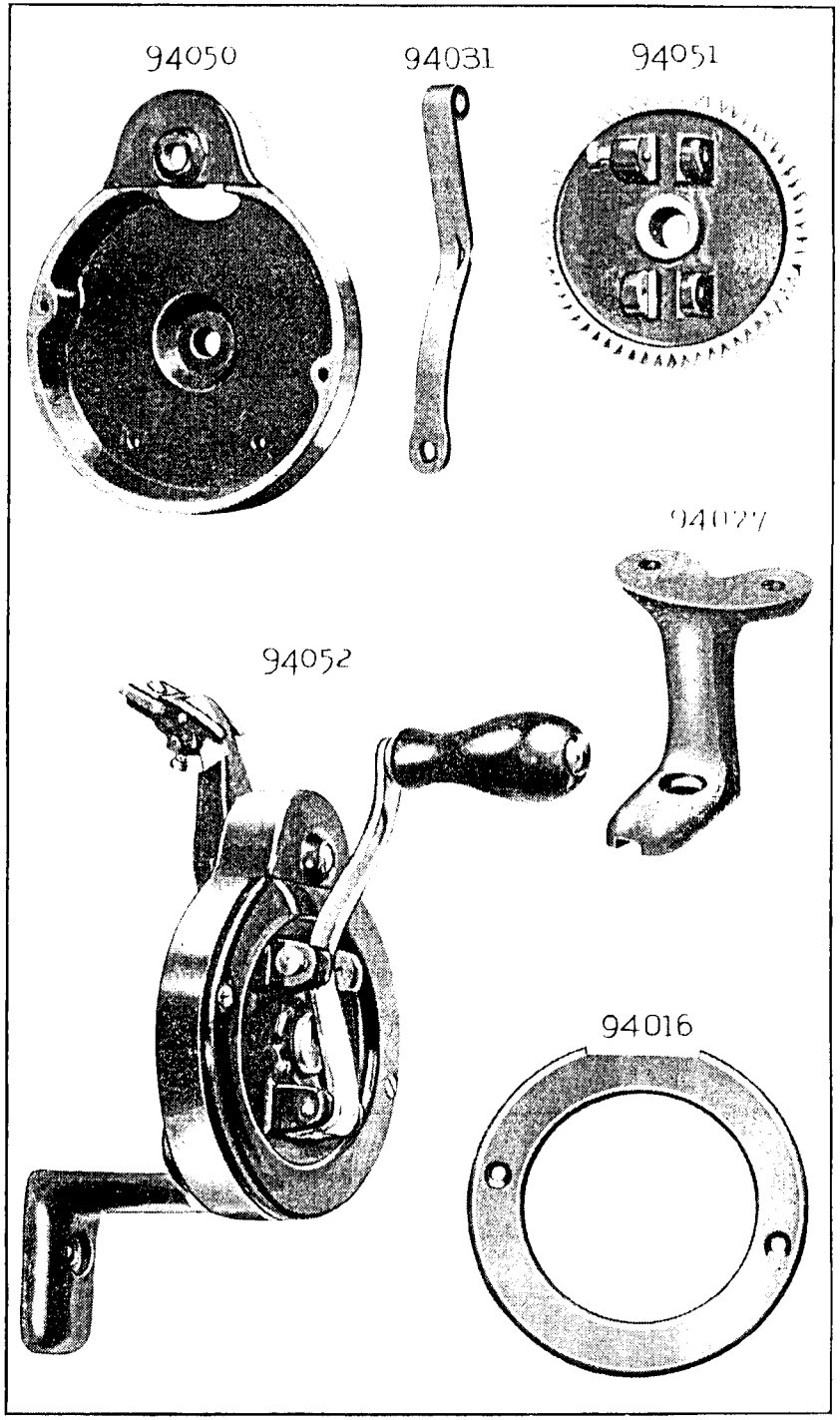
94050
94031
94051
94027
94052
94016

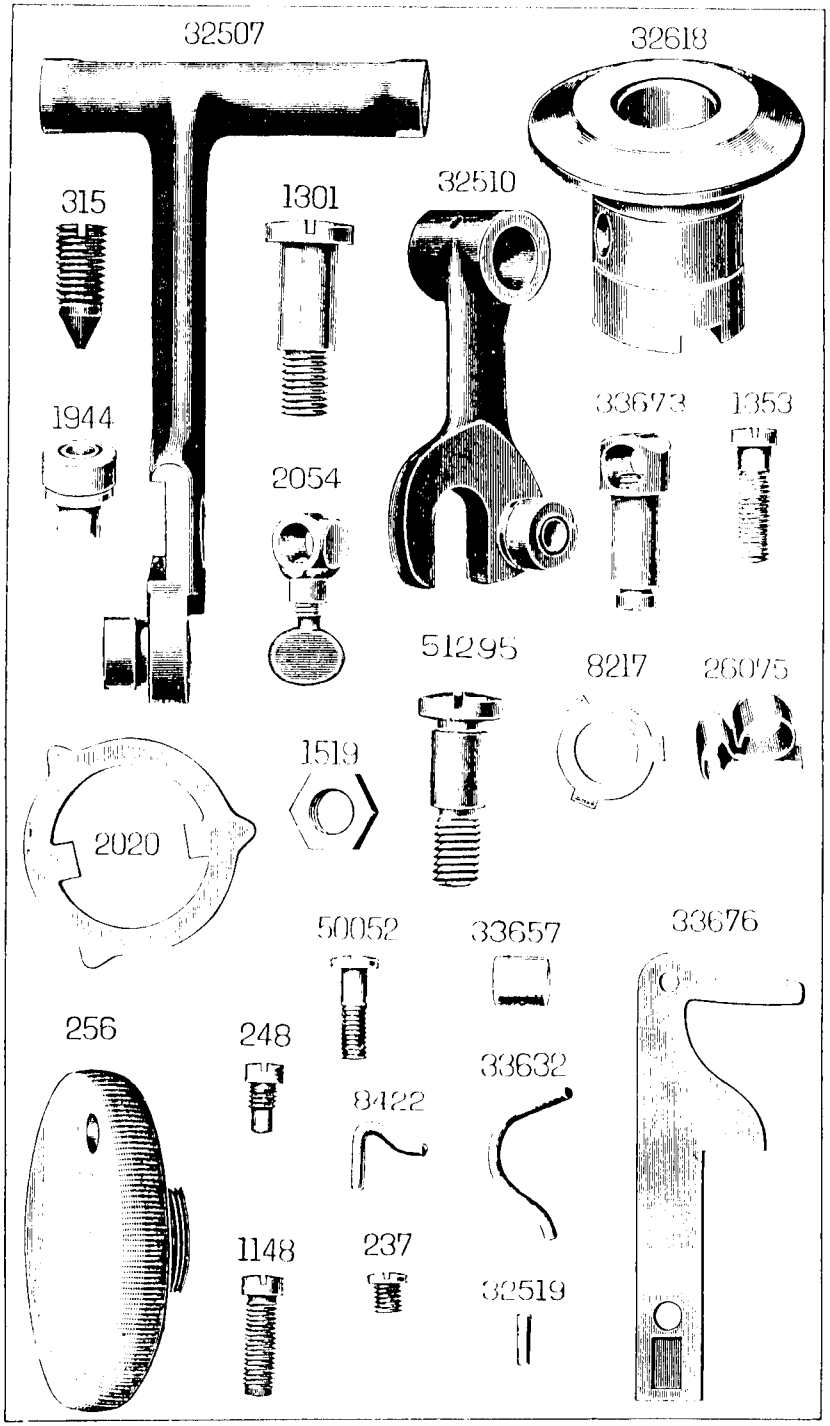
32507
32618
315
1301
32510
1944
33673
1353
2054
51295
8217
26075
1519
2020
50052
33657
33676
256
248
33632
8422
1148
237
32519

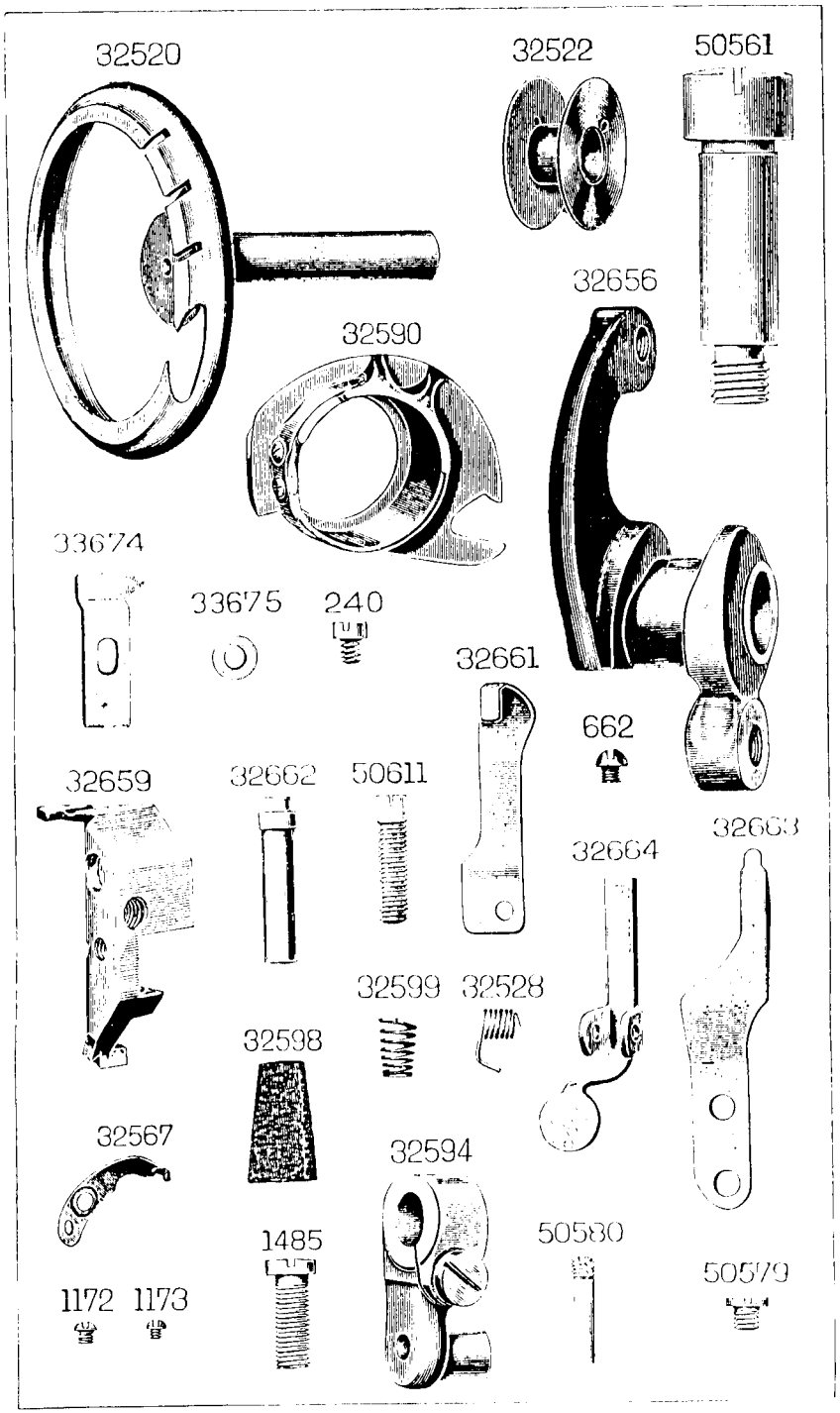
32520
32522
50561
32656
32590
33674
33675
240
32661
662
32659
32662
50611
32664
32663
32599
32528
32598
32567
32594
1485
50580
1172
1173
50579

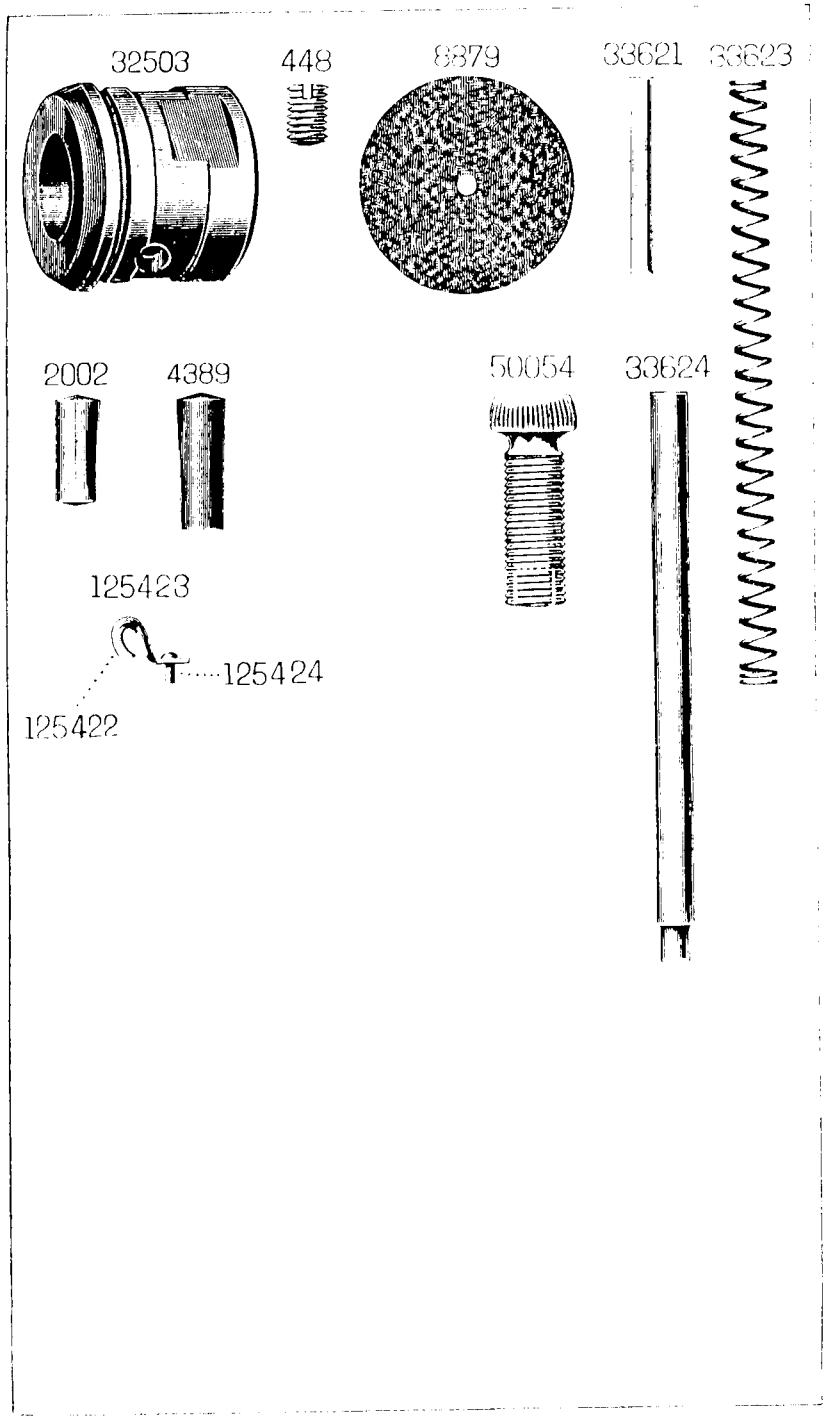
32503
448
8379
33621
33623
2002
4389
50054
33624
125423
125424
125422

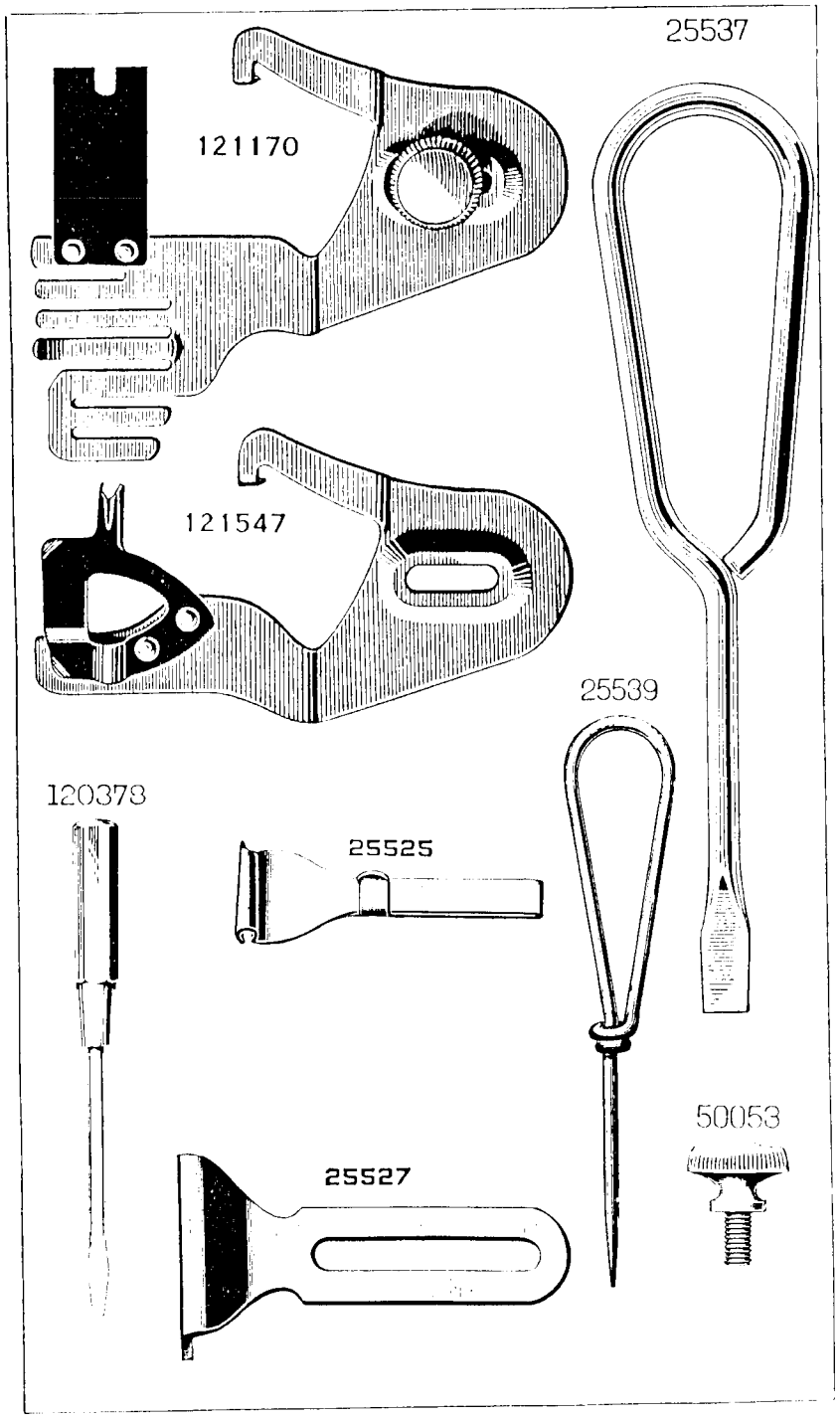
25537
121170
121547
25539
120378
25525
50053
25527

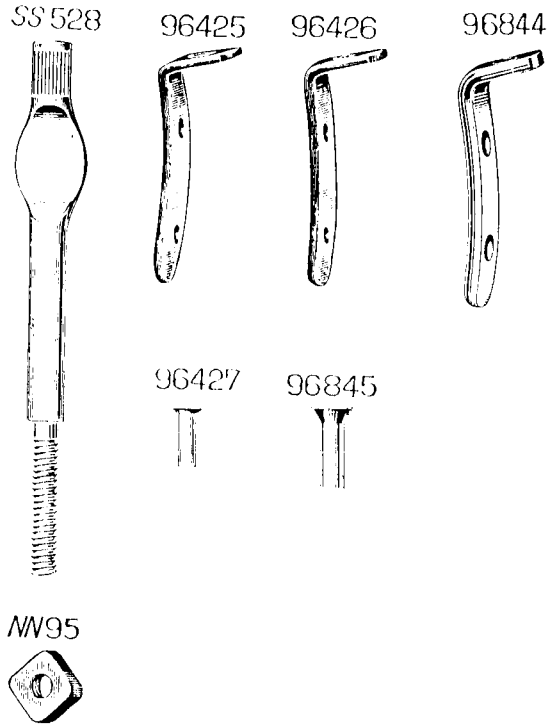
SS 528
96425
96426
96844
96427
96845
NW95

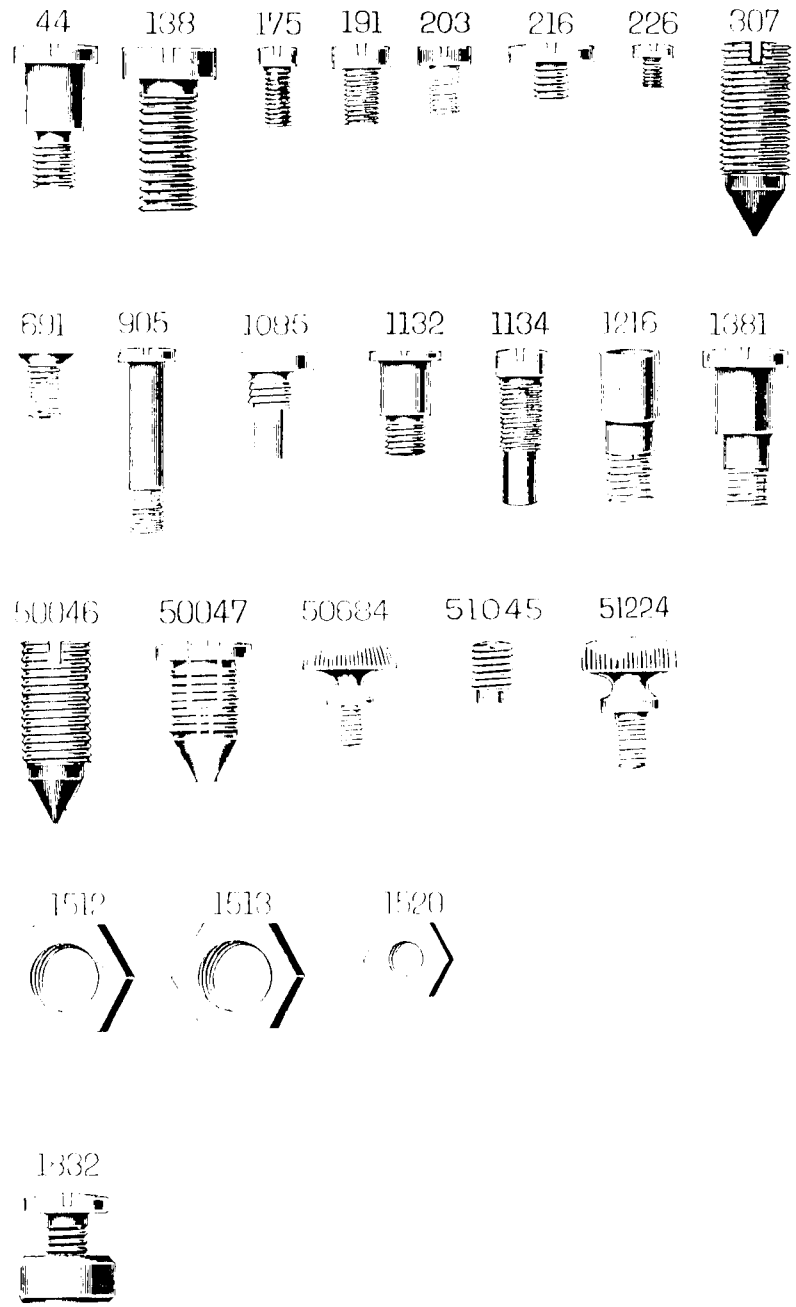
44
138
175
191
203
216
226
307
691
905
1085
1132
1134
1216
1381
50046
50047
50684
51045
51224
1512
1513
1520
1632

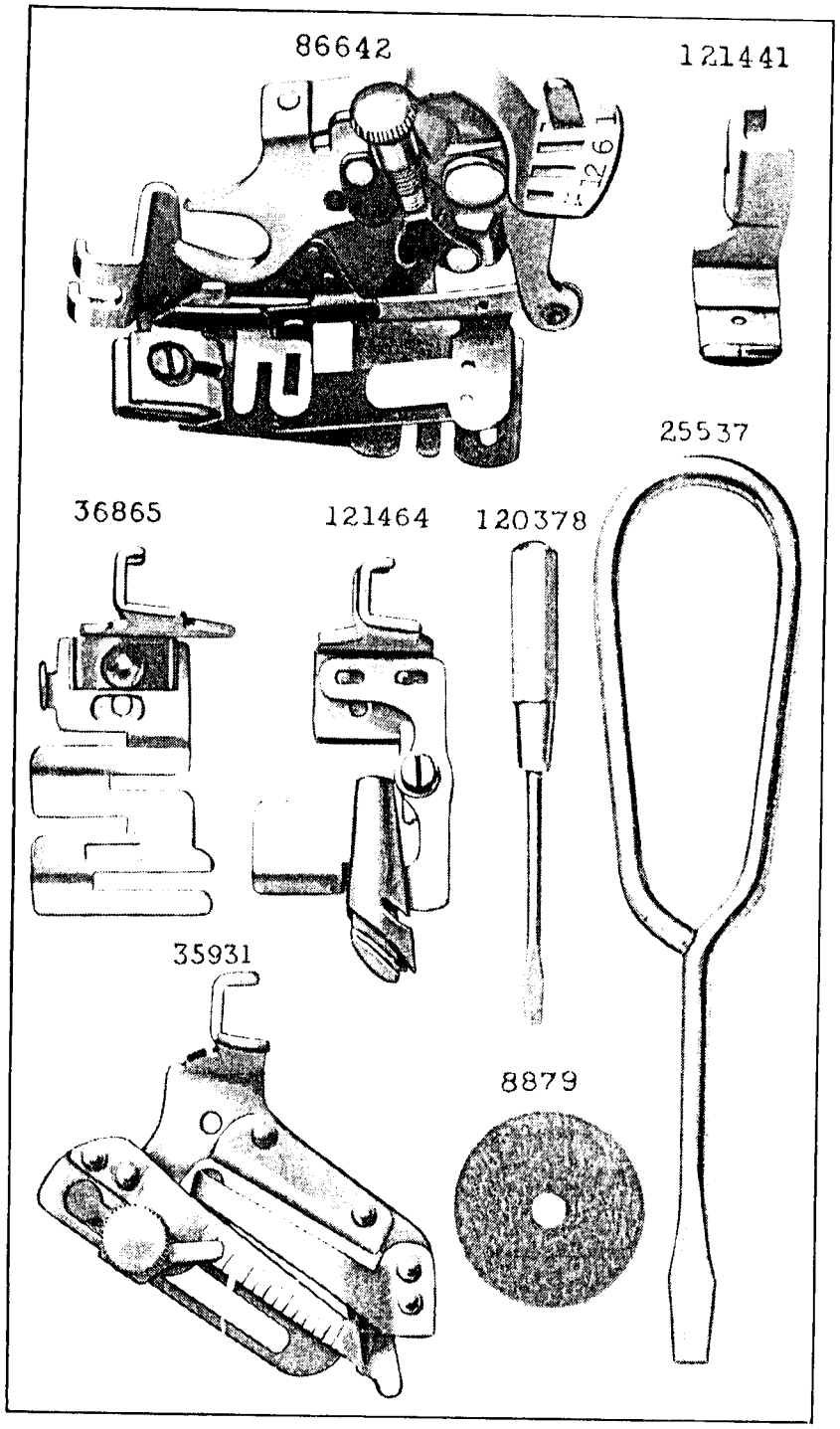
86642
121441
25537
36865
121464
120378
35931
8879

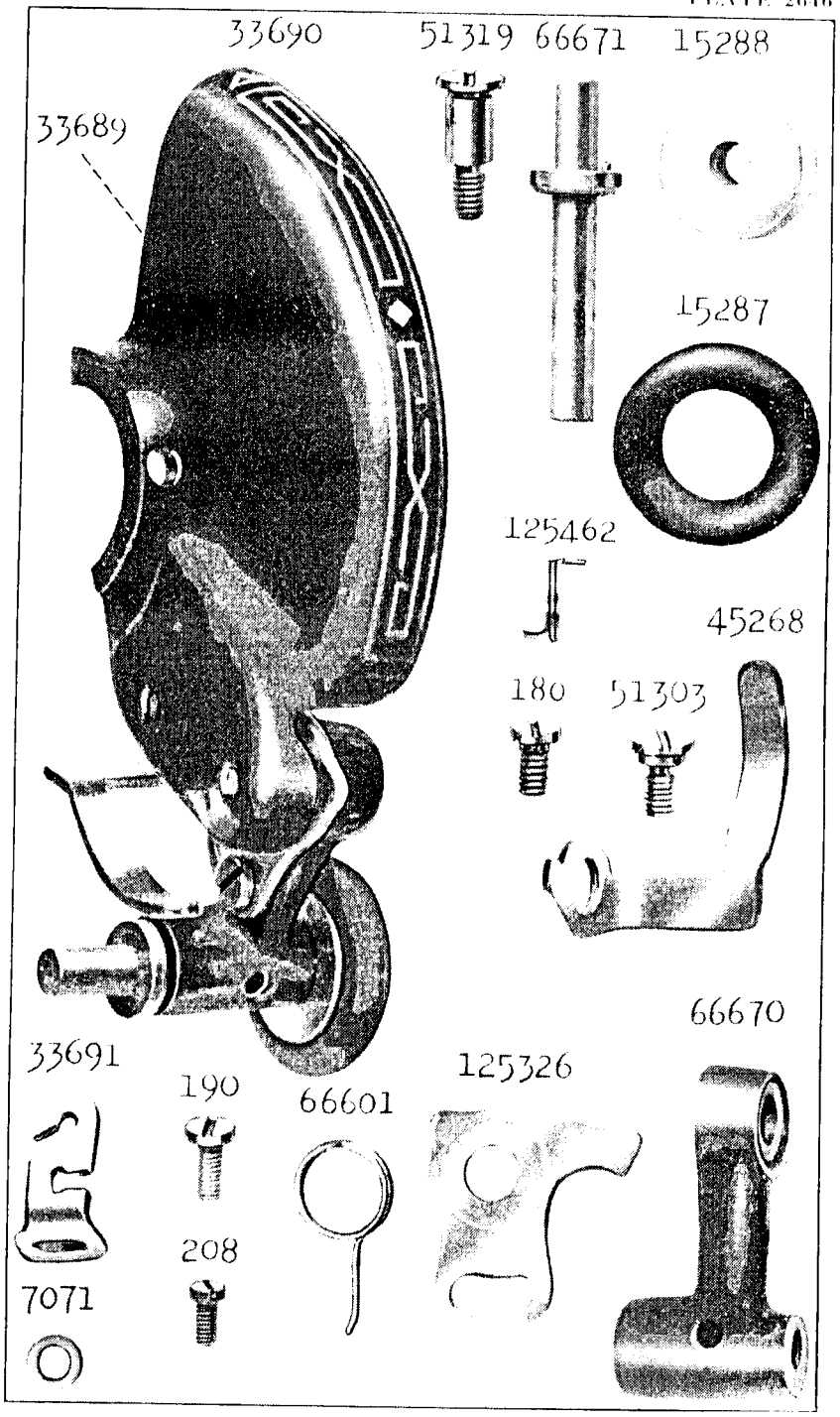
33690
51319
66671
15288
33689
15287
125462
45268
180
51303
66670
33691
190
66601
125326
208
7071

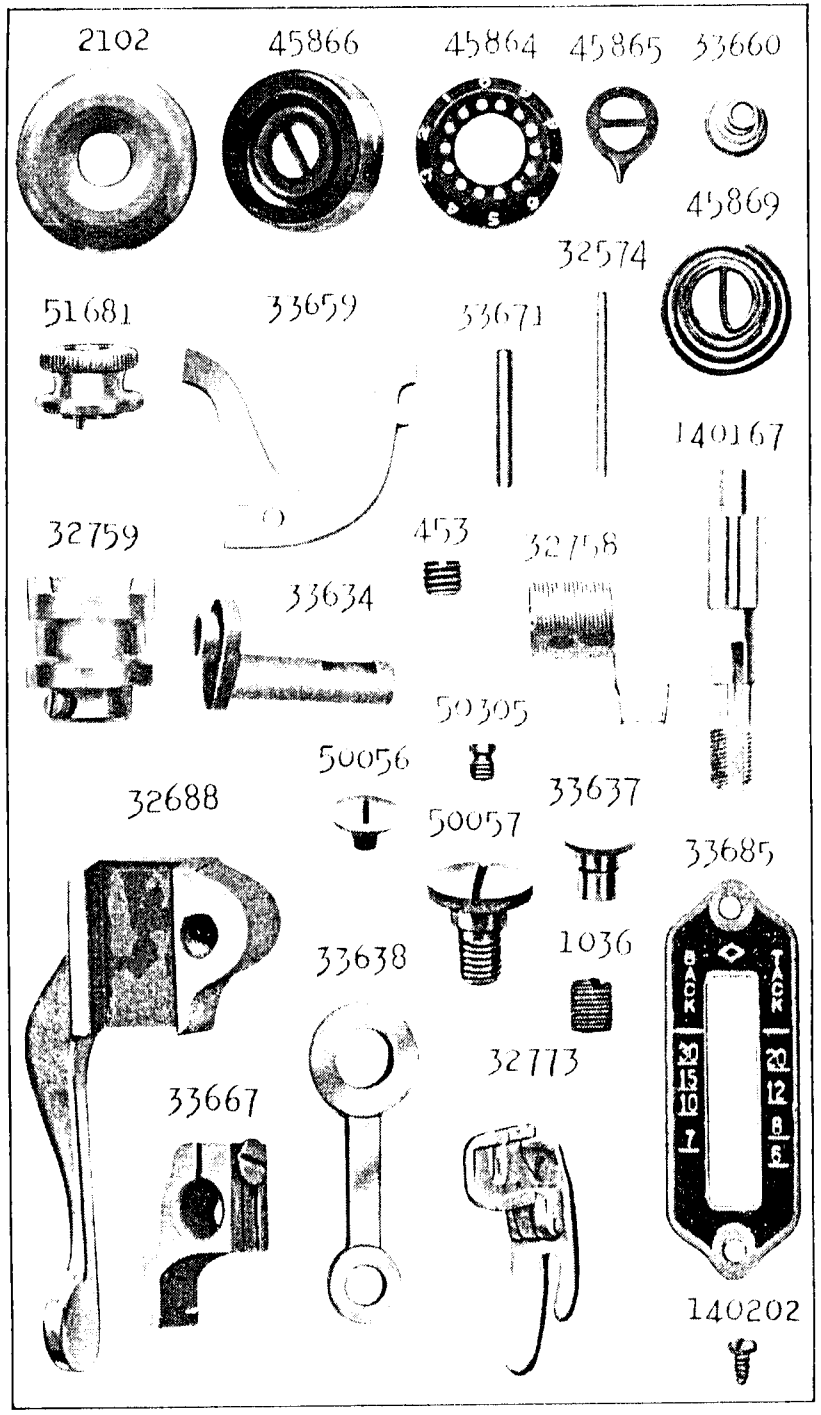
2102
45866
45864
45865
33660
45869
32574
51681
33659
33671
140167
32759
453
32758
33634
50305
50056
32688
33637
50057
33685
33638
1036
32773
33667
140202
BACK
TACK

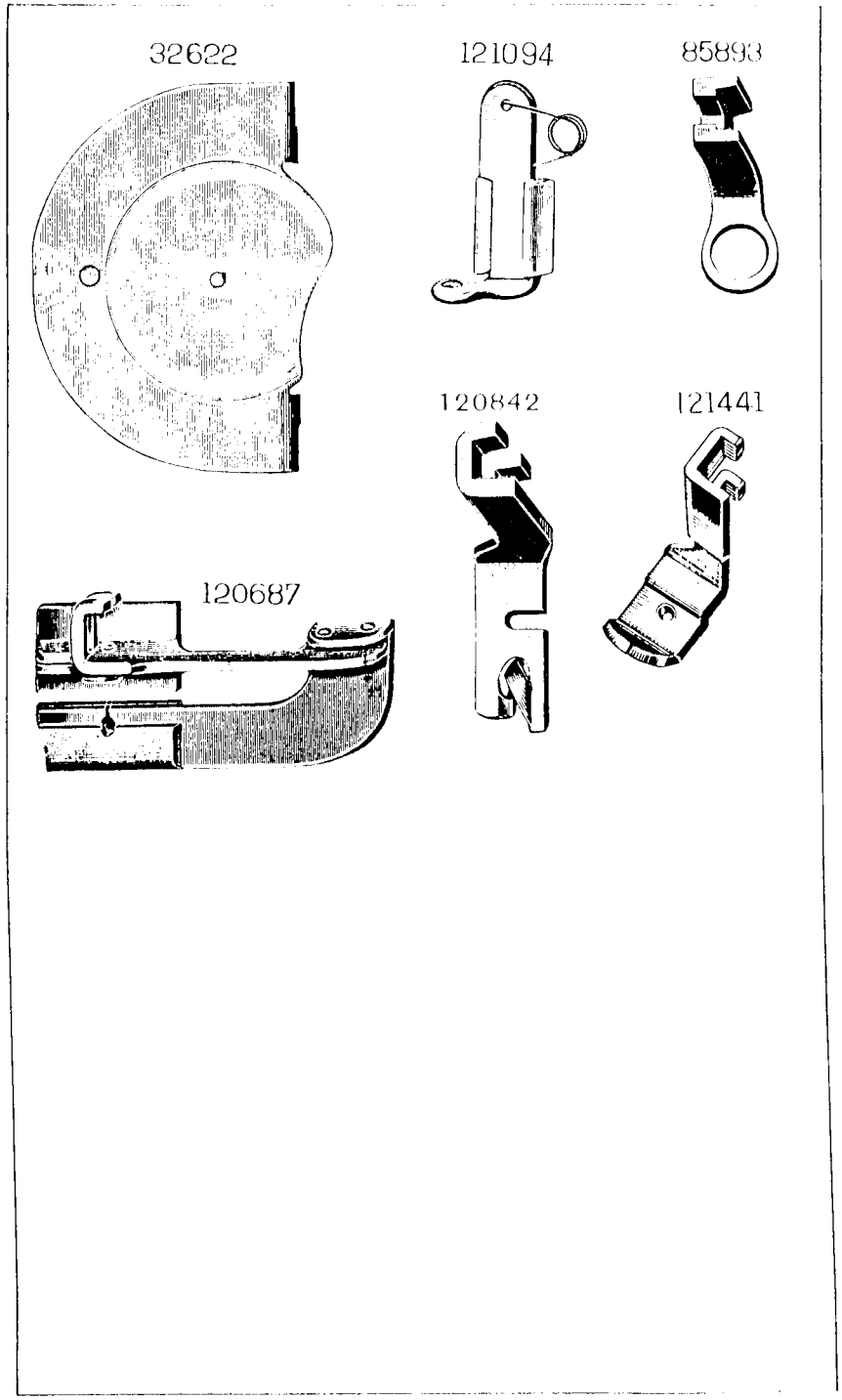
32622
121094
85893
120842
121441
120687

INSTRUCTIONS FOR ORDERING

In ordering from this List, the prefix and affix letters with the part number **MUST BE** quoted exactly as they are shown in the first column.

A number always indicates the same part in whatever List it may appear, or for whatever machine.

The affix letters (where shown) indicate the style of finish, as follows :—

- **A.** Hardened, Polished, Nickel Plated and Buffed.
- **A.A.** Buffed and Chromium Plated.
- **A.B.** Hardened, Polished, Buffed and Chromium Plated.
- **A.C.** Brown Baking Enamel Finish.
- **A.D.** Grey Baking Enamel Finish.
- **A.E.** Hardened, Bright Rumbled and Nickel Plated.
- **A.F.** Hardened, Bright Rumbled and Nickel Plated, Bright Rumbled and Chromium Plated.
- **A.J.** Polished, Nickel Plated and Chromium Plated.
- **A.K.** Hardened, Polished, Nickel Plated and Chromium Plated.
- **A.L.** Heat Treated for Toughness.
- **B.** Polished, Nickel Plated and Buffed.
- **C.** Hardened only.
- **C.R.** Hardened and Merlized.
- **D.** Polished only.
- **E.** Soft, not Polished.
- **F.** Hardened and Polished.
- **F.J.** Hardened, Polished and Nickel Plated.
- **G.** Bright Rumbled and Nickel Plated.
- **H.** Blued.
- **J.** Nickel Plated only.
- **K.** Hardened and Nickel Plated.
- **L.** Brass Plated.
- **M.** Oxidized.
- **N.** Japanned, Dull.
- **P.** Japanned, Bright.
- **P.P.** Wrinkle Finish.
- **R.** Merlized.
- **S.** Cadmium Plated.
- **T.** Copper Plated.
- **T.A.** Hardened, Polished, Copper and Nickel Plated and Buffed.
- **T.B.** Copper and Nickel Plated and Polished.
- **T.J.** Copper and Nickel Plated only.
- **T.K.** Hardened, Copper and Nickel Plated.
- **T.L.** Copper and Brass Plated.
- **T.M.** Copper Plated and Oxidized.
- **U.** Zinc Plated.
- **V.** Silver Plated.
- **W.** Polished and Nickel Plated.
- **X.** Black Oxide for Iron and Steel.
- **X.C.** Hardened and Black Oxide for Iron and Steel.
- **Y.** Black Nickel Plated only.
- **Z.** Chromium Plated.
- **Z.A.** Hardened, Polished, Nickel Plated, Buffed and Chromium Plated.
- **Z.B.** Polished, Nickel Plated, Buffed and Chromium Plated.
- **Z.C.** Hardened and Chromium Plated.
- **Z.D.** Polished and Chromium Plated.
- **Z.G.** Bright Rumbled, Nickel Plated, Bright Rumbled and Chromium Plated.
- **Z.J.** Nickel and Chromium Plated.
- **Z.T.** Copper and Chromium Plated.

Parts marked with an asterisk (*) are furnished only when the repairs are made at Factory.

PARTS COMPLETE

FOR

CLASS 99K MACHINES

(Nos. 99K26 to 99K28)

Lock Stitch ; Horizontal Oscillating Hook ; Stationary Bobbin Case ; Link Take-up ; Reversible Drop Feed ; for Family Use

No.	Plate	
*33688	—	**Arm** with 448za and 32503 ... ...
2002	2396	" Dowel Pin (2) ... ...
4389	2396	" " " (for repairs only) ... ...
33602r	892	" Rock Shaft with 905e ... ...
33661	—	" " " 33602r with 1216c and 1520j ... ...
905e	2400	" " " Adjusting Screw ... ...
50046c	2400	" " " Screw Centre (lower) ... ...
33666	—	" " " " " (") 50046c with 1512r ...
1512r	2400	" " " " " (") Nut ... ...
50047c	2400	" " " " " (upper) ... ...
138e	2400	" Screw (3) ... ...
33603	892	" Shaft ... ...
33662		" " 33603 with 32503 and 33615 ... ...
32503	2396	" " Bushing ... ...
448za	2396	" " " Set Screw ... ...
2007zb	895	" Spool Pin ... ...
8879	2574	" " " Washer (cloth) ... ...
32672	1722	**Balance Wheel,** 3¼″ pulley, for 99K28 Machine ... ...
15282	892	" " 2¼″ pulley, for 99K26 and 99K27 Machines ...
*33681p	—	**Bed** ... ...
256zb	2393	**Clamp Stop Motion Clamp Screw** ... ...
248za	2393	" " " " Stop Screw ... ...
2020	2393	" " " " Washer ... ...
32618	2393	" " " Flanged Bushing ... ...
1148al	2393	" " " " " Set Screw ... ...
32619zb	—	**Clamp Stop Motion,** complete, Nos. 248za, 256zb, 1148al, 2020 and 32618 ... ...
*33663zb	—	**Face Plate** ... ...
33654zb	892	" " 33663zb with 125423zb ... ...
203zb	2400	" " Screw ... ...
125422zb	2396	" " Thread Guard ... ...
125423zb	2396	" " " " 125422zb with 125424zb ... ...
125424zb	2396	" " " " Rivet ... ...
50684zb	2400	" " Thumb Screw ... ...

No.	Plate	
32507r	2393	**Feed Bar** with 1944 ... ...
1944	2393	" " Roller and Stud ... ...
315c	2393	" " Screw Centre (2) ... ...
15445	—	" " " " 315c with 1519r (2) ... ...
1519r	2393	" " " " Nut (2) ... ...
32600	895	**Feed Dog** ... ...
191c	2400	" " Screw ... ...
33609r	892	**Feed Forked Connection** with 175j ... ...
33664	—	" " " 33609r with 1832 ... ...
175j	2400	" " " Adjusting Screw ... ...
1381c	2400	" " " Hinge Screw (eccentric) ... ...
1520r	2400	" " " " " Nut ... ...
1832	2400	" " " Roller with 1085e ... ...
1085e	2400	" " " " Screw Stud ... ...
*32510r	2393	**Feed Raising Bar** with 1944 ... ...
~~32638~~	—	~~" " " 32510r with 1301c and 1520r~~ ... ...
1301c	2393	" " " Hinge Screw ... ...
~~1520r~~	~~2400~~	~~" " " " " Nut~~ ... ...
1944	2393	" " " Roller and Stud ... ...
32688zb	2647	**Feed Regulator** ... ...
8217	2393	" " Friction Washer ... ...
51295c	2393	" " Hinge Screw ... ...
33611r	892	**Feed Rock Shaft** ... ...
307c	2400	" " " Screw Centre (2) ... ...
56814	—	" " " " " 307c with 1513r ...
1513r	2400	" " " " " Nut (2) ... ...
51045al	2400	**Machine Hinge Connection Set Screw** (2) ... ...
33655	895	**Needle Bar** with 32519 ... ...
33613	895	" " Connecting Link ... ...
33678	—	" " " " 33613 with 33673 ... ...
33673	2393	" " " Stud with 1353al ... ...
1353al	2393	" " " " Set Screw ... ...
33615	895	" " Crank with 1036c and 1134al ... ...
1134al	2400	" " " Position Screw ... ...
33657	2393	" " Hole Plug ... ...
2054zb	2393	**Needle Clamp** with 140545za ... ...
140545za	1160	" " Thumb Screw ... ...
32519	2393	" Stop Pin ... ...

No.	Plate	
32520	2394	**Oscillating Hook** ... ...
32626		" " 32520 with 32590 ... ...
33674	2394	" " and Needle Bar Timing Gauge ... ...
240c	2394	" " " " " " " Screw ...
33675	2394	" " " " " " " " Washer
32656	2394	" " Bell Crank ... ...
50561c	2394	" " " " Hinge Screw ... ...
32522	2394	" " Bobbin ... ...
32590	2394	" " " Case with 1172f, 1173d and 32567 ...
32661	2394	" " " " Cushion Spring ... ...
662j	2394	" " " " " " Screw ...
32659	2394	" " " " Position Bracket ... ...
32662	2394	" " " " " " Hinge Stud ...
50611j	2394	" " " " " " " " Set Screw
32663	2394	" " " " " " Latch ...
50579j	2394	" " " " " " " Screw
32598	2394	" " " " " " Oil Pad (felt)
32599	2394	" " " " " " " " Holder
32660		**Oscillating Hook** Bobbin Case Position Bracket, complete Nos. 662j, 32528, 32598, 32599, 32659, 32661 to 32664 50579j and 50580e ... ...
1172f	2394	**Oscillating Hook** Bobbin Case Tension Regulating Screw ...
32567	2394	" " " " " Spring ... ...
1173d	2394	" " " " " " Screw ...
32664	2394	" " " Ejector ... ...
50580e	2394	" " " " Hinge Screw Stud ...
32528	2394	" " " " Spring ... ...
32529r	895	" " Connecting Link ... ...
1132c	2400	" " " " Hinge Screw ... ...
32594r	2394	" " Crank with 1485r ... ...
1485r	2394	" " " Clamping Screw ... ...
33618r	892	" " Pitman with two 175r ... ...
175r	2400	" " " Adjusting Screw ... ...
44c	2400	" " " Screw Stud (left) ... ...
1216c	2400	" " " " " (right) ... ...
216c	2400	" " " " " (") Cap Screw ...
1520j	2400	" " " " " (") Nut ... ...
32569zb	895	" " Slide ... ...
32570	895	" " " Friction Spring ... ...
226j	2400	" " " " " Screw ... ...
33619	895	**Presser Bar** (hollow) ... ...
33620za	895	" " Lifter ... ...
33621	2396	" " " Hinge Pin ... ...
33667e	2647	" " Lifting Bracket with 50052e ... ...

No.	Plate	
33669e	..	**Presser Bar** Lifting Bracket 33667e with 33676 ... ...
33677		" " " " 33669e with 240e, 33674 and 33675
50052e	2393	" " " " Clamping Screw ... ...
33623	2396	" " Spring ... ...
33672		" " " 33623 with 33624 ... ...
~~32666~~	~~895~~	**~~Presser Foot~~** ... ...
45329zb		" " Hinge Pin ... ...
32772zb		" " Plate ... ...
32774zb		" " Shank ... ...
32773zb	2647	**Presser Foot** (hinged), complete, Nos. 32772zb, 32774zb and 45329zb
51224b	2400	" " Thumb Screw ... ...
50051zb	2396	**Pressure Regulating Thumb Screw** ... ...
33621	2396	" " " " Extension Pin ...
33676zb	2393	**Slack Thread Regulator** ... ...
33685	2647	**Stitch Indicator Plate** ... ...
140202s	2647	" " " Screw (2) ... ...
2102	2647	**Tension Disc** ... ...
45866	2647	" Indicator ... ...
45864	2647	" " Flange ... ...
45865	2647	" " " Stop Washer ... ...
51681zb	2647	" Regulating Thumb Nut ... ...
33659	2647	" Releasing Lever ... ...
33671	2647	" " " Hinge Pin ... ...
33660	2647	" " " Spring ... ...
32574	2647	" " Pin ... ...
45869	2647	" Spring ... ...
140167zb	2647	" Stud ... ...
45870		" " 140167zb with 51681zb ... ...
50305	2647	" " Set Screw ... ...
32757		**Tension** (graduated), complete, Nos. 32574, 32758, 32759, 45864 to 45866, 45869, 45870 and two 2102 ... ...
26075e	2393	**Thread Cutter and Holder** ... ...
33632zb	2393	**Thread Guard** (front of arm) ... ...
237zb	2393	" " (" " ") Set Screw ... ...
8422zb	2393	" " (head of arm) ... ...
33634	2647	" Take-up Crank ... ...
1036al	2647	" " " Set Screw ... ...
33635za	895	" " Lever ... ...
33636za		" " " complete, Nos. 33635za, 33637 and 33638

No.	Plate	
33679za		**Thread** Take up Lever 33636za with 33634, 33678, 50056e and 50057e
50056e	2647	" " " Cap Screw ... ...
33637	2647	" " " Hinge Stud ... ...
33638	2647	" " " Link ... ...
50057e	2647	" " " " Hinge Screw ... ...
32758	2647	" " Spring ... ...
32759	2647	" " " Regulator with 50305e ... ...
153al	2647	" " " " Set Screw ... ...
32602za	895	**Throat Plate** for 32600 ... ...
691za	2400	" " Screw (2) ... ...
94013		**Drip Pan** (for Machine on Cover Set) ... ...

Bobbin Winder (Universal)

No.	Plate	
33689	2646	Bracket (belt cover) ... ...
180zb	2646	" Screw ... ...
66670	2646	Frame ... ...
45297		" 66670 with 15288 and 66671 ... ...
51319zb	2646	" Hinge Screw ... ...
66601	2646	" Spring ... ...
15287	2646	Friction Ring (rubber) ... ...
15288	2646	Pulley ... ...
66671	2646	Spindle ... ...
45268	2646	Stop Latch ... ...
51303zb	2646	" " Hinge Screw ... ...
125462	2646	" " Spring ... ...
125326	2646	Tripping Arm ... ...
190zb	2646	" " Screw ... ...
33690	2646	**Bobbin Winder,** complete, Nos. 190zb, 15287, 33689, 45268, 45297, 51303zb, 51319zb, 66601, 125326 and 125462 ...
33691	2646	Thread Guide ... ...
208zb	2646	" " Screw ... ...
7071	2646	" " " Washer ... ...

Attachments

ATTACHMENT SET

(Supplied with Machine)

No.	Plate	
121464	2574	Binder ... ...
36865	2574	Edge Stitcher ... ...
121441	2574	Gathering Foot (double toe) ... ...
35931	2574	Hemmer (adjustable) ... ...
15 × 1		Needles (6) ... ...
86642	2574	Ruffler ... ...
25537	2574	Screw Driver (machine) ... ...
120378	2574	" " (bobbin case) ... ...
8879	2574	Spool Pin Washer (cloth) ... ...
160810		Set of Attachments, complete, Nos. 25537, 35931, 36865, 86642, 120378, 121441, 121464, two 8879 and six needles ... ...
120842	2649	Hemmer (foot) $\frac{5}{64}$" hem ... ...
32522	2394	Oscillating Hook Bobbin ... ...
120861		Tin of Oil (3 oz.) ... ...

ATTACHMENTS WHICH MAY BE PURCHASED SEPARATELY

25525	2397	Bias Gauge ... ...
25527b	2397	Cloth Guide ... ...
50053b	2397	" " and Under Braider Thumb Screw ...
120687	2649	Imitation Hemstitching Attachment with Yielding Presser Plate
35932		Quilter ... ...
121170	2397	Ruffler Shirring Plate ... ...
25539	2397	Stiletto ... ...
36583	1160	Tucker ... ...
121547	2397	Under Braider ... ...

Cording Feet

For Stitching on Edge, Inserting Cord and Slide Fastener Work

No.	Plate	
160845		Cording Foot (left toe)
160846		" " (right toe) ... ...
		" " Adjusting Thumb Screw ... ...
121876		" " Body ... ...
121877		Presser Foot (adjustable) for sewing on the right or left side of the needle, complete, Nos. 121875, 121876 and 140347w ...
160846 ~~125035~~		Presser Foot (right toe) for stitching on edge and inserting cord

NEEDLE THREADER

No.	Plate	
121632	-	Needle Threader (Universal)

DARNING AND EMBROIDERY

No.	Plate	
86493	1160	Darning Presser Needle Clamp with 140545k
86494	1160	" " " " Stripper Spring
86495	1160	" " " " " " Eyelet
140545k	1160	" " " " Thumb Screw
86496	1160	Darning Presser, complete, Nos. 86493 to 86495
121094	2649	Spring Darning Foot
85893	2649	Embroidery Foot
32622	2649	Feed Cover Plate

EMBROIDERY HOOPS (Plain)

(BIRCH)

No.	Plate	
87586	-	Round, $5\frac{5}{8}''$ diam. × 7^{m}_{m} high
96416		" 7″ " × 7^{m}_{m} "
87589	1221	" 8″ " × 7^{m}_{m} "
87593		" 10″ " × $\frac{7}{16}''$ "
87595		" 12″ " × $\frac{1}{2}''$ "
96422	1221	Oval, 9″ × $4\frac{1}{2}''$ × 7^{m}_{m} high
87597		" 12″ × $5\frac{1}{2}''$ × 7^{m}_{m} "

EMBROIDERY HOOPS (with Clamp)

(BIRCH)

No.	Plate	
96417	-	Round, $5\frac{5}{8}''$ diam. × 7^{m}_{m} high, with *SS528j*, *NN95j*, two 96425 and four 96427
96418		" 7″ " × 7^{m}_{m} " " *SS528j*, *NN95j*, two 96426 and four 96427
96419		" 8″ " × 7^{m}_{m} " " *SS528j*, *NN95j*, two 96426 and four 96427
96420		" 10″ " × $\frac{7}{16}''$ " " *SS528j*, *NN95j*, two 96426 and four 96427
96421		" 12″ " × $\frac{1}{2}''$ " " *SS528j*, *NN95j*, two 96844 and four 96845
96423		Oval, 9″ × $4\frac{1}{2}''$ × 7^{m}_{m} high, with *SS528j*, *NN95j*, 96425, 96426 and four 96427
96424		" 12″ × $5\frac{1}{2}''$ × 7^{m}_{m} " " *SS528j*, *NN95j*, 96425, 96426 and four 96427
96425	2399	Clamping Bracket for 96417, 96423 and 96424
96426	2399	" " " 96418 to 96420, 96423 and 96424
96844	2399	" " " 96421
96427	2399	" " Rivet for 96417 to 96420, 96423 and 96424
96845	2399	" " " " 96421
SS528j	2399	" " Screw
NN95j	2399	" " " Nut

HAND ATTACHMENT

(For 99K27 Machine)

No.	Plate	
94050	2284	Body ...
94027	2284	" Bracket ...
183e	2114	" " Screw ...
94028	2114	Crank Handle (wood) ...
94029b	2114	" " Spindle ...
94030b	2114	" " " Flange (loose) ...
94069	2114	" Hinge Pin ...
94031a	2284	" Lever ...
94032	2114	" " Lock Pin ...
94033b	2114	" " " " Head ...
55531	2114	" " " " Spring ...
94034b		" complete, Nos. 94028, 94029b, 94030b and 94031a ...
94046	2114	Driver ...
94070		" 94046 with 80028 and 94048 ...
94036	2114	" Finger ...
94039	2114	" " Driving Pad (raw hide) ...
94040	2114	" " " " Plate ...
SS567e	2114	" " " and Plate Binding Screw ...
94041		" " 94036 with SS567e, 94039 and 94040 ...
94044	2114	" Hinge Pin ...
94037	2114	" " Latch ...
SS565e	2114	" " " Screw Stud ...
94038	2114	" " " Spring ...
94051b	2284	Gear with 55531, 94032 and 94033b ...
94016	2284	" Cover ...
399a	2114	" " Screw ...
SS599f	2114	" Screw Stud ...
94048	2114	Pinion ...
80028	2114	" Dowel Pin ...
SS600f	2114	" Screw Stud (eccentric) ...
94052b	2284	**Hand Attachment,** complete, Nos. SS565e, SS566e, SS599f, SS600f, 94016, 94027, 94031b, 94037, 94038, 94041, 94044, 94050, 94051b, 94069, 94070, two each 183e and 399a ...
SS566e	2114	Hand Attachment Screw ...