SINGER
99K29,K31

Form K6188

ILLUSTRATED
LIST OF PARTS
FOR
Nos. 99K29 to 99K31
Machines

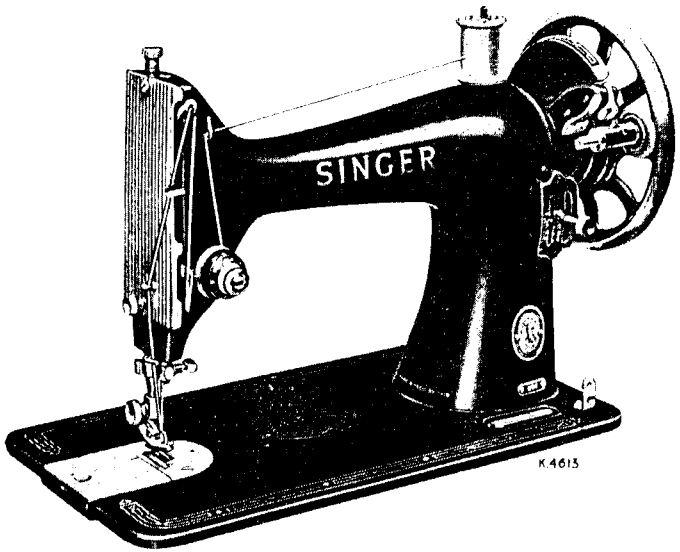

No. 99K29 Machine

** A Trade Mark of
THE SINGER MANUFACTURING COMPANY

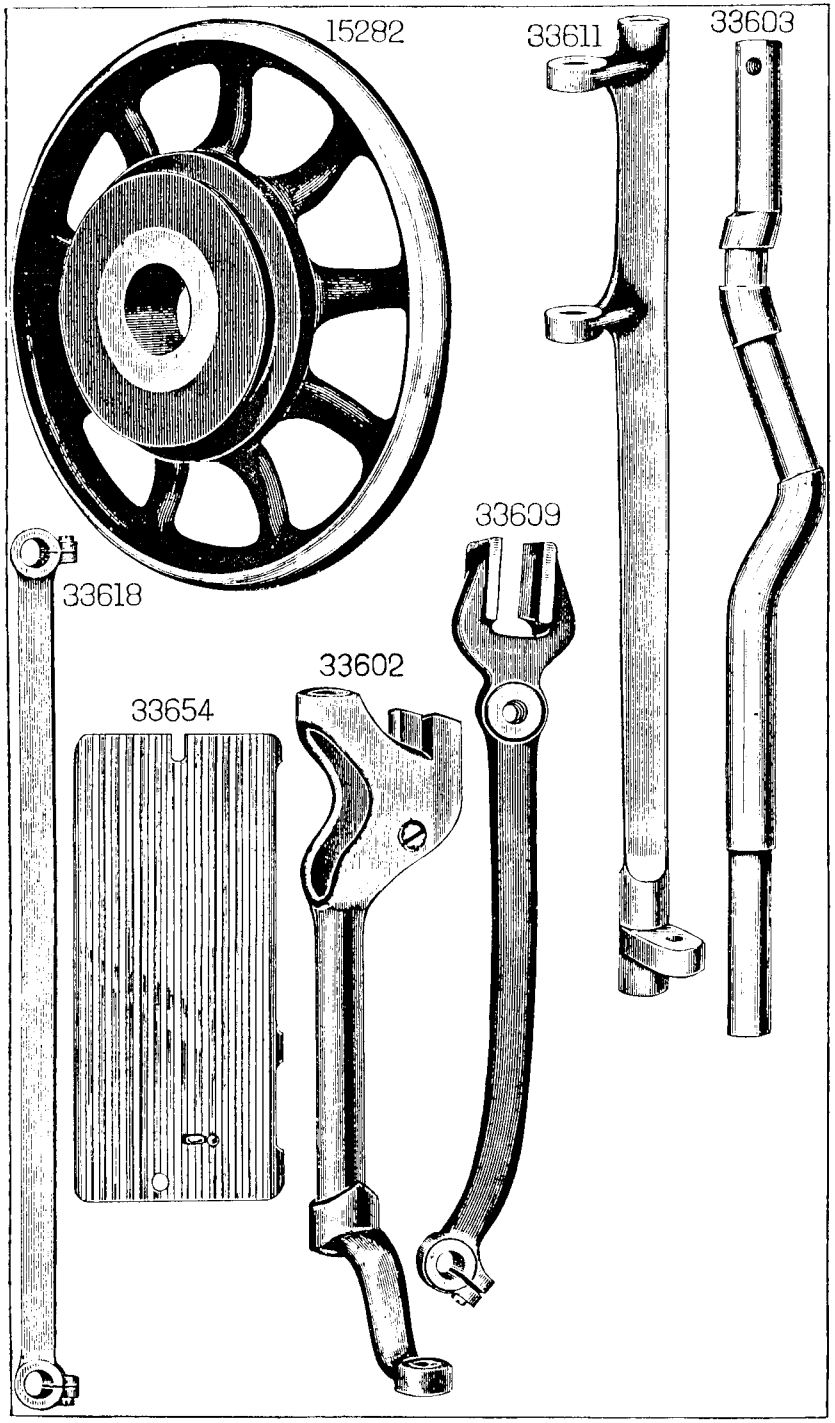
15282
33611
33603
33609
33618
33602
33654

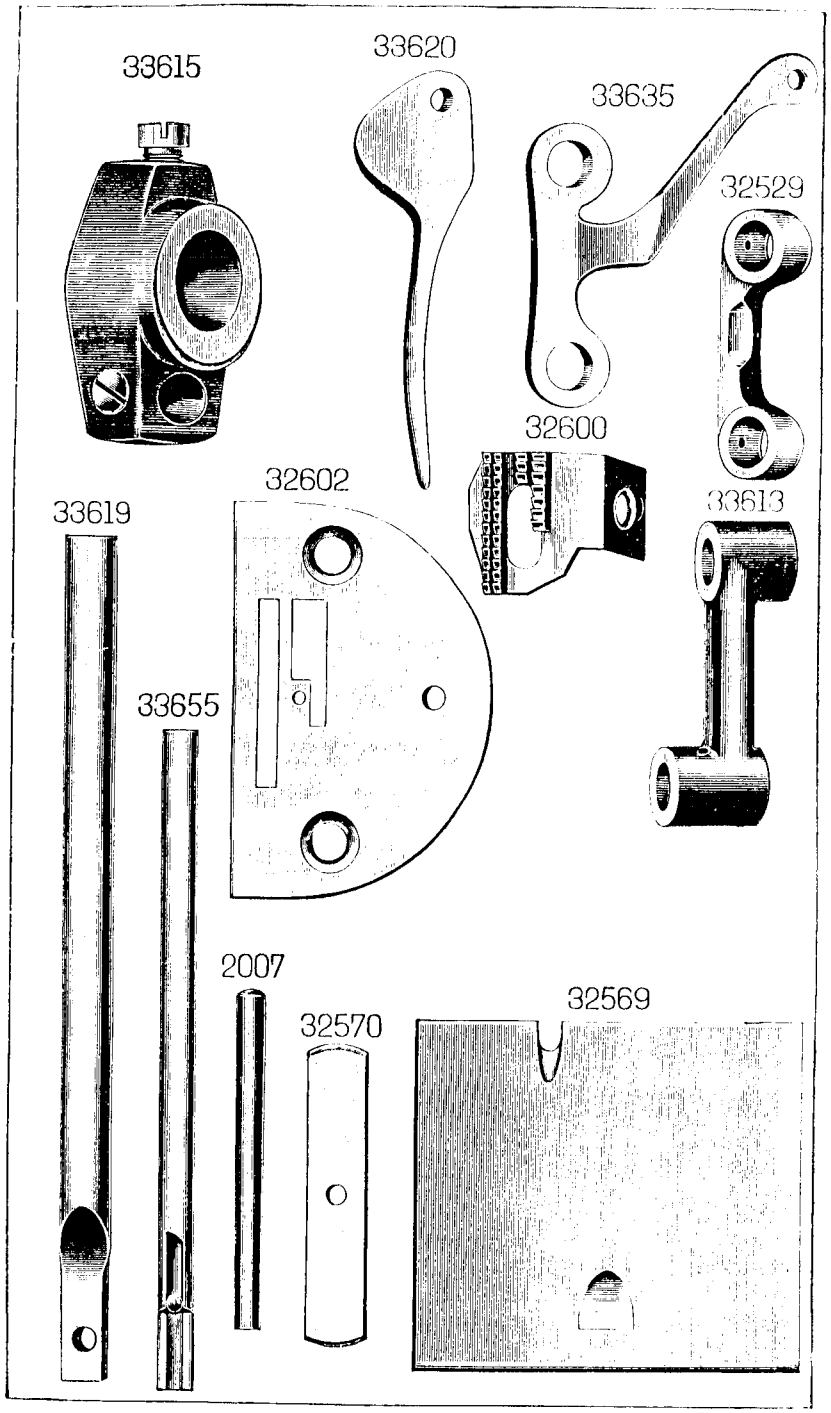
33615
33620
33635
32529
32600
32602
33613
33619
33655
2007
32570
32569

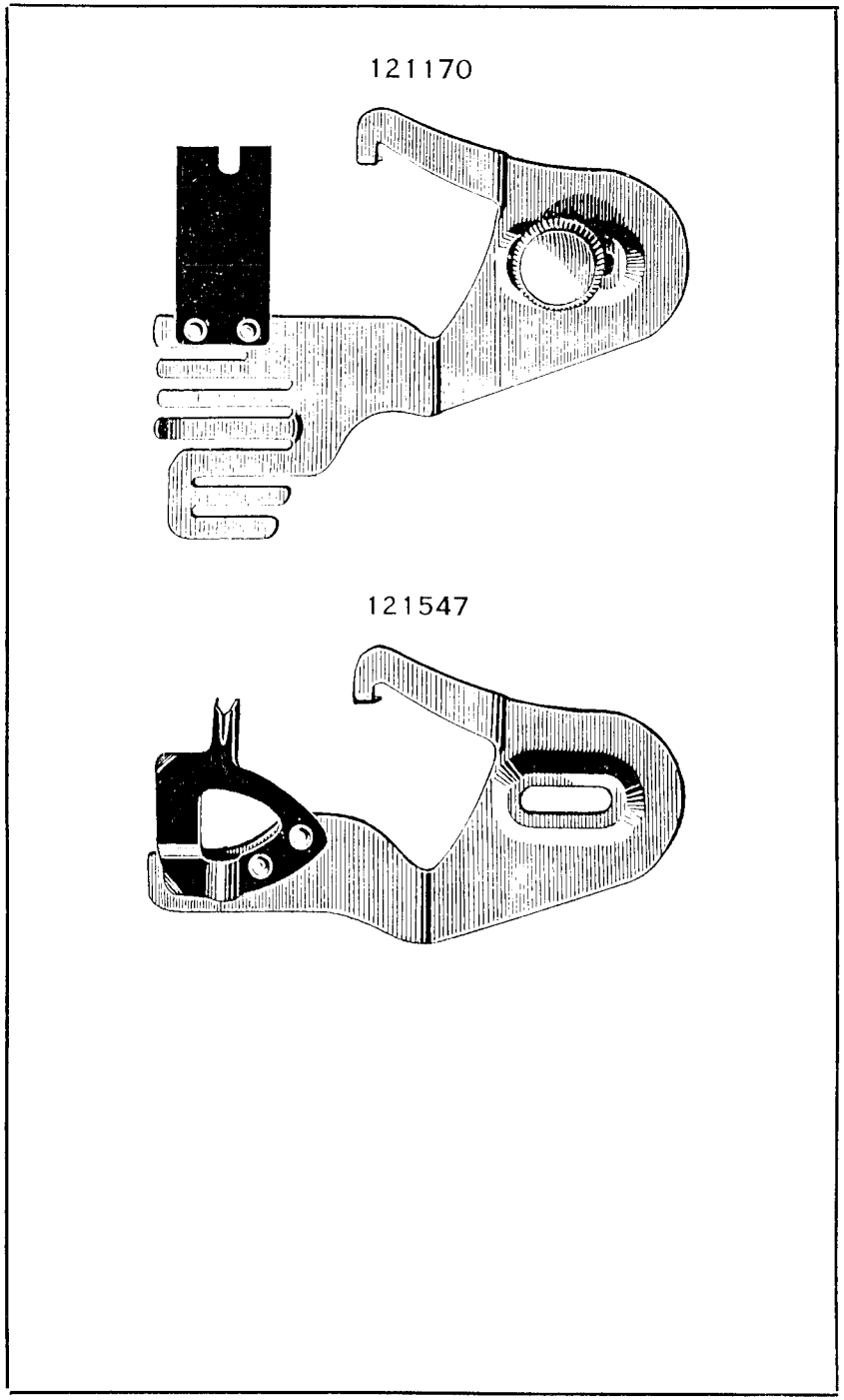
121170
121547

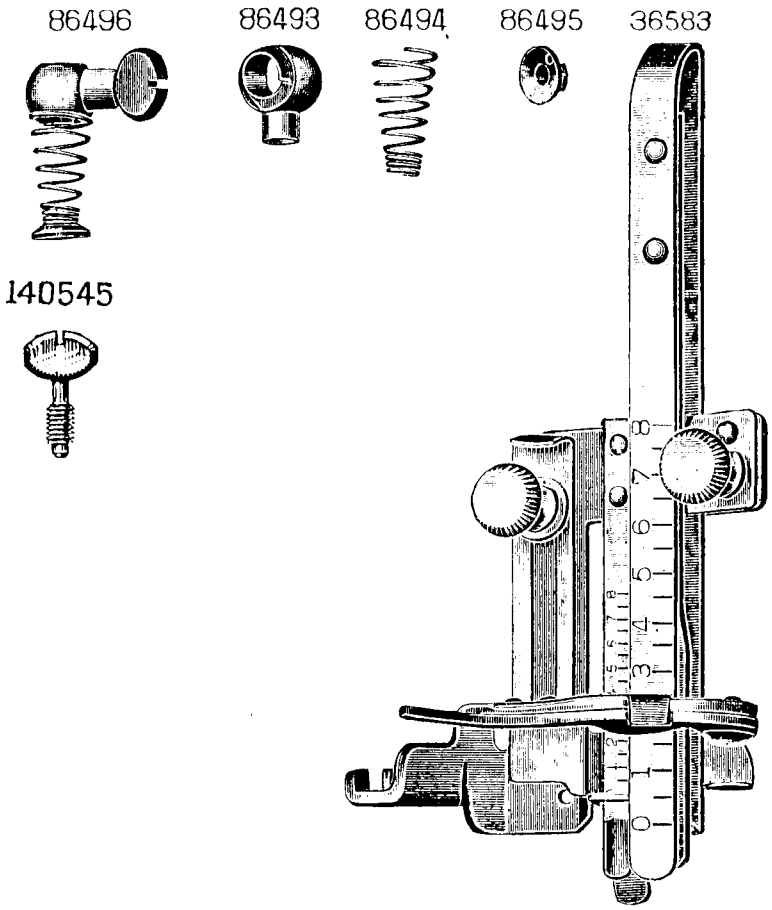
86496
86493
86494
86495
36583
140545

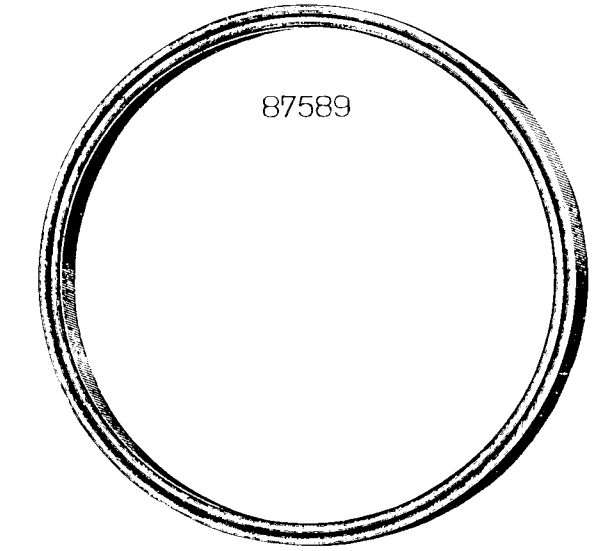
87589

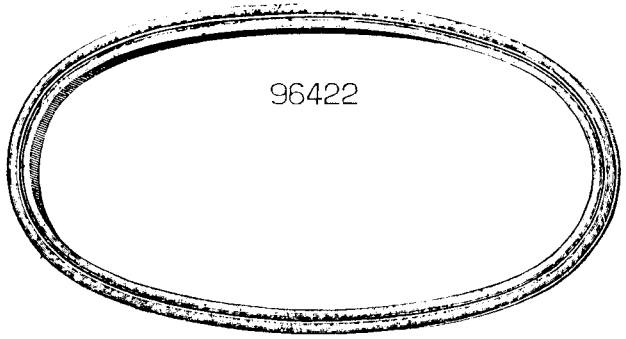
96422

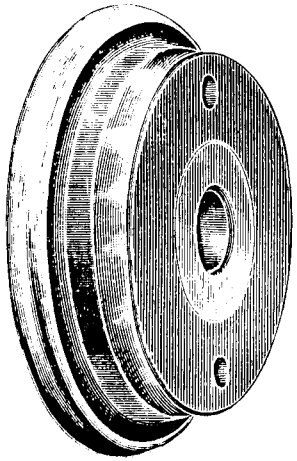
32672

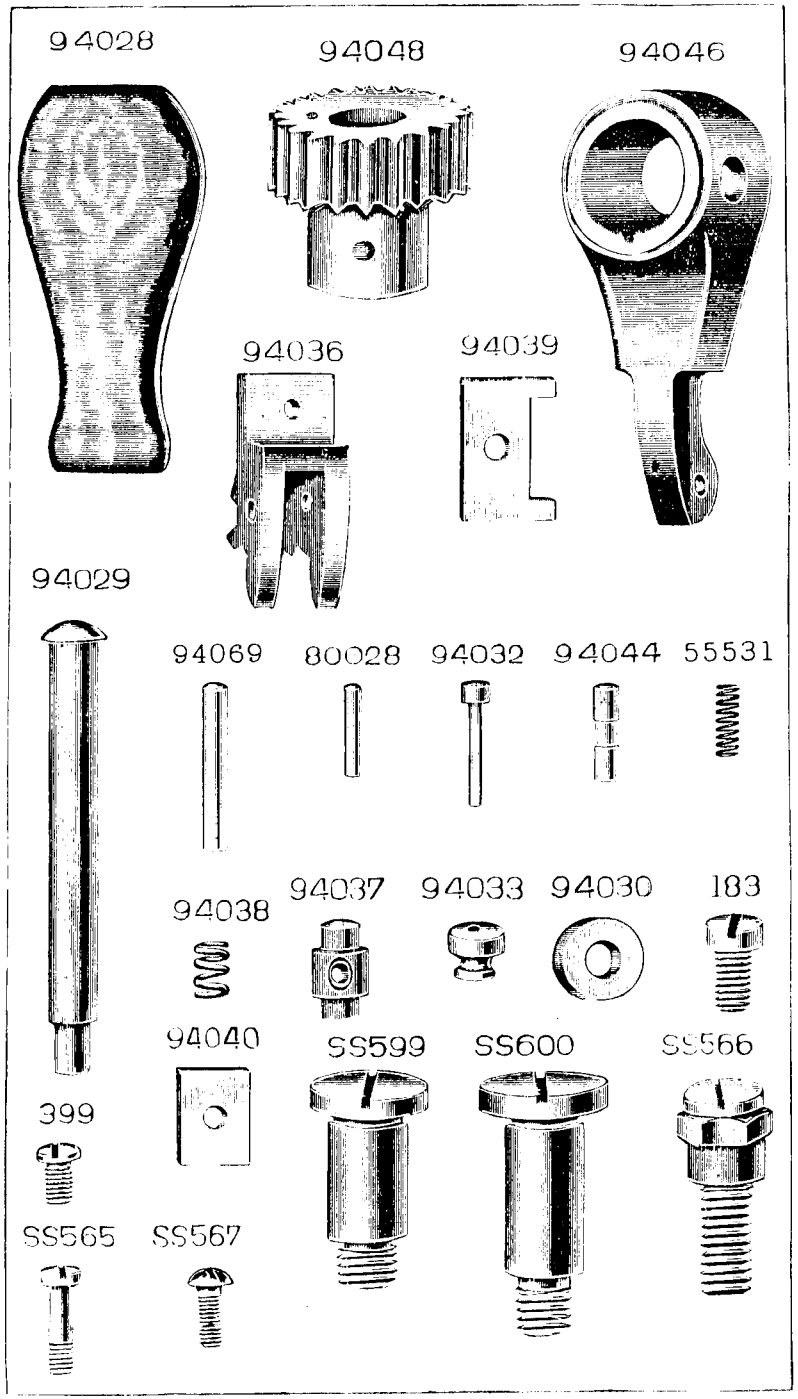
94028
94048
94046
94036
94039
94029
94069
80028
94032
94044
55531
94038
94037
94033
94030
183
94040
SS599
SS600
SS566
399
SS565
SS567

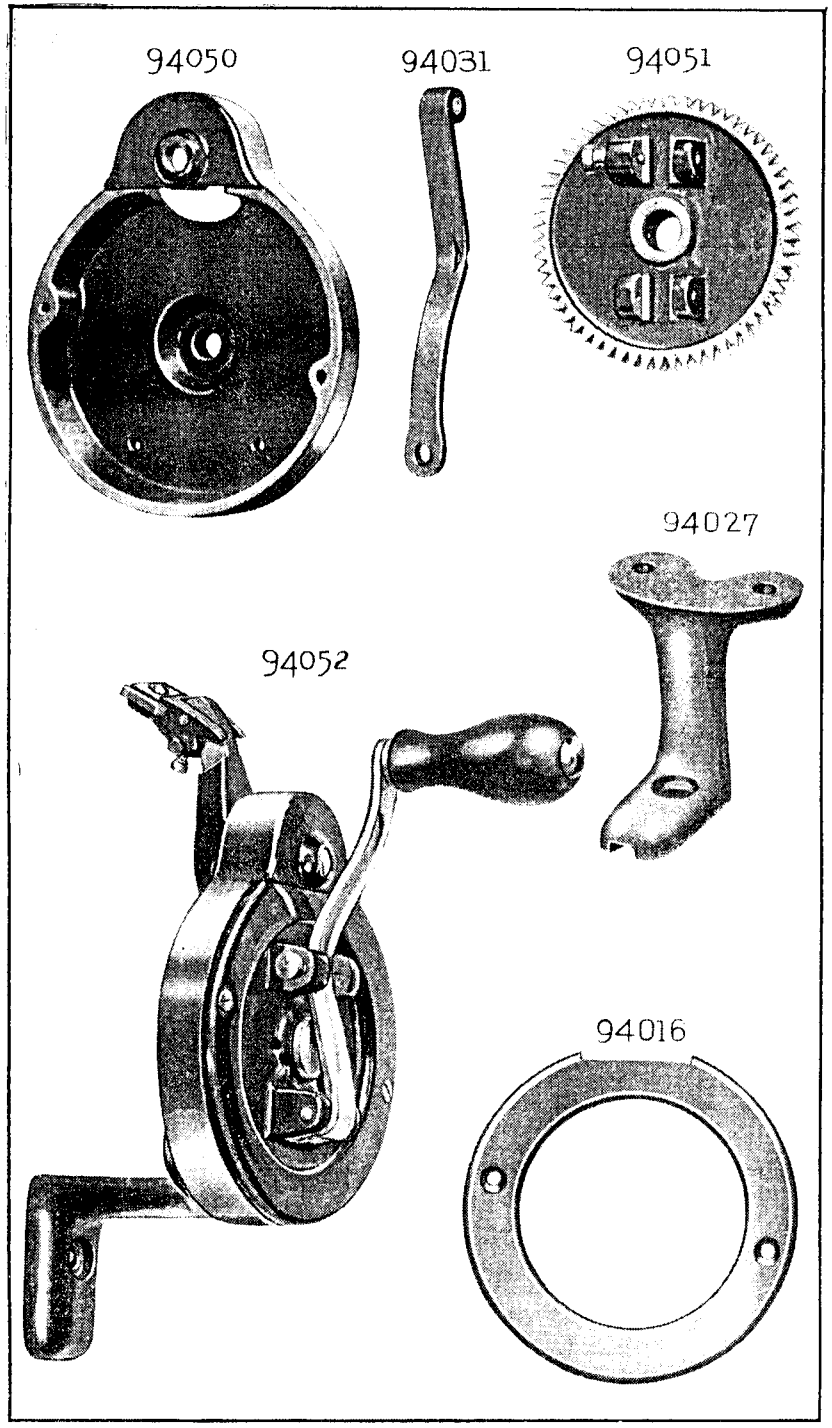
94050
94031
94051
94027
94052
94016

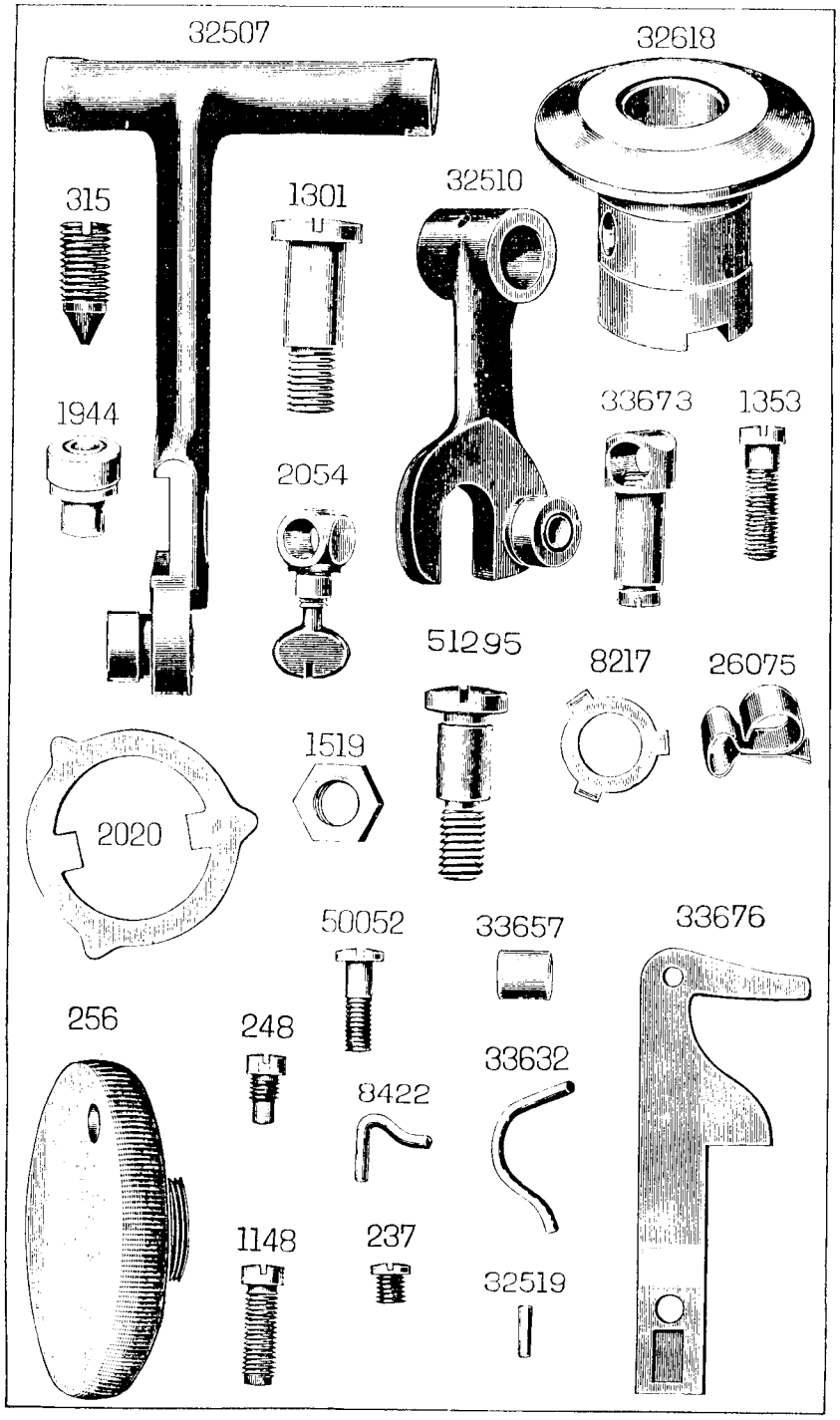
32507
32618
315
1301
32510
1944
33673
1353
2054
51295
8217
26075
1519
2020
50052
33657
33676
256
248
33632
8422
1148
237
32519

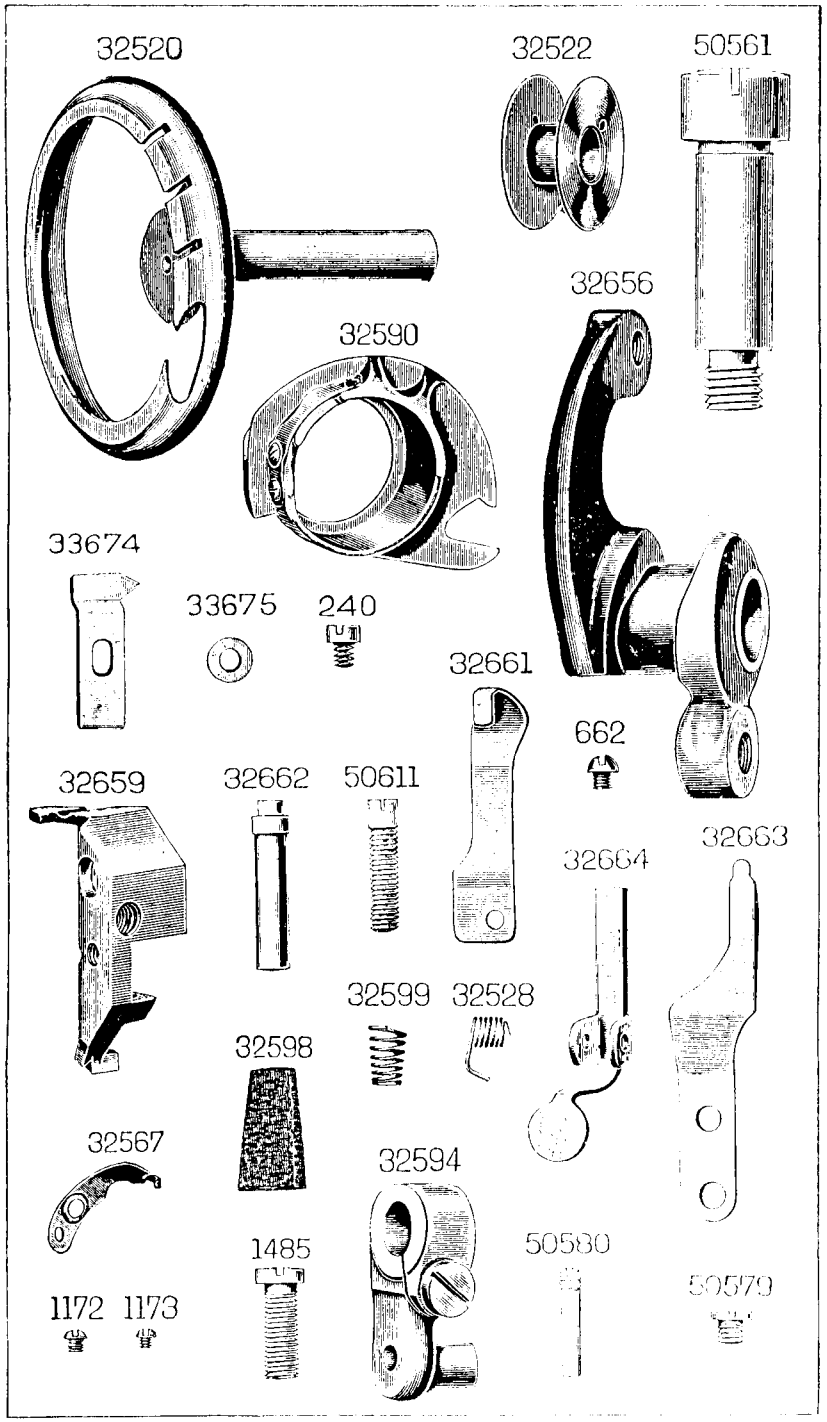
32520
32522
50561
32656
32590
33674
33675
240
32661
662
32659
32662
50611
32663
32664
32599
32528
32598
32567
32594
1485
50580
50579
1172
1173

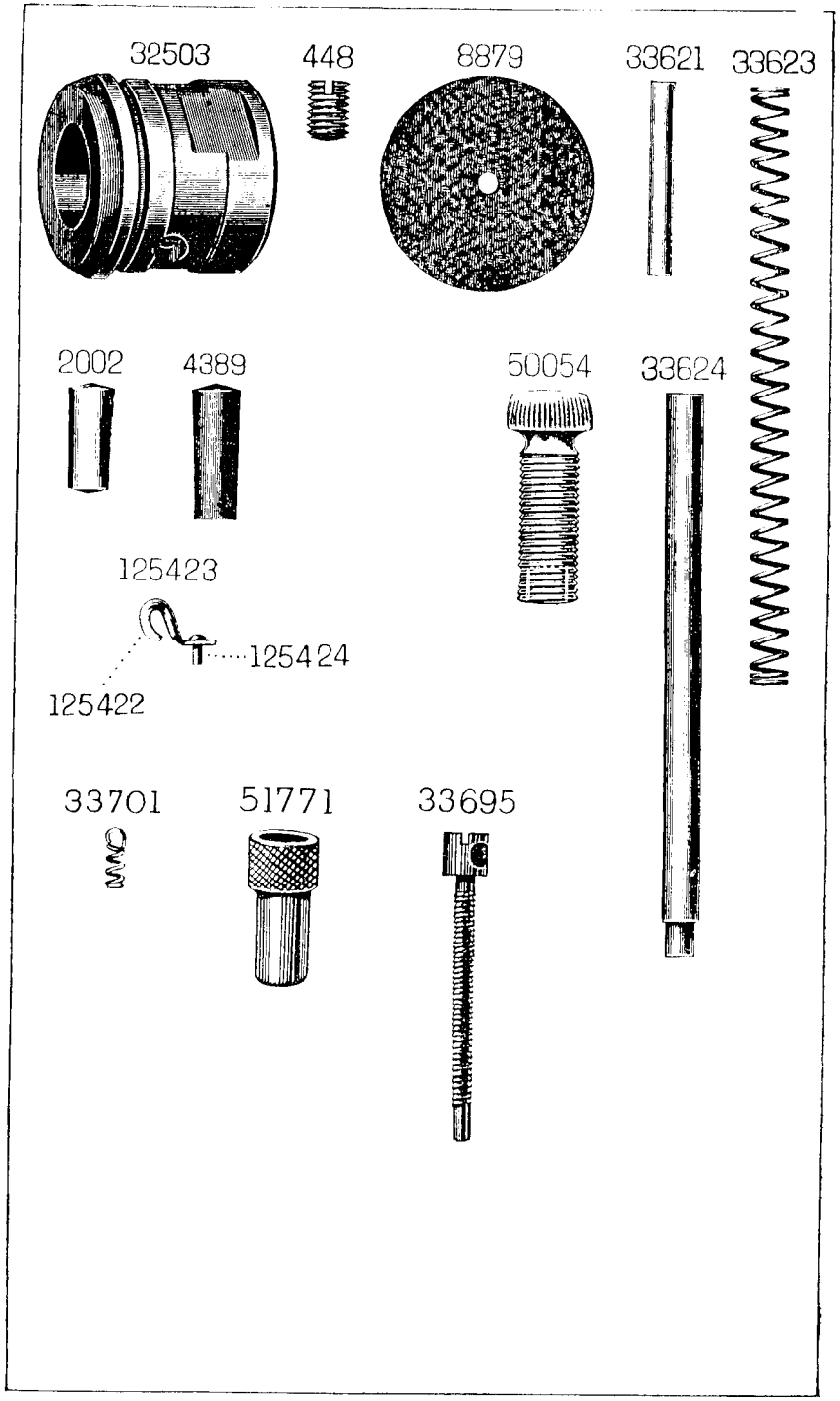
32503
448
8879
33621
33623
2002
4389
50054
33624
125423
125424
125422
33701
51771
33695

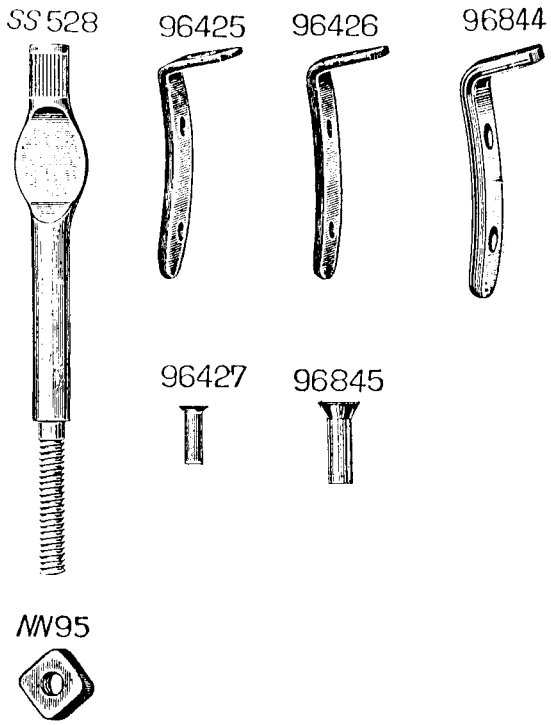
SS 528
96425
96426
96844
96427
96845
NN95

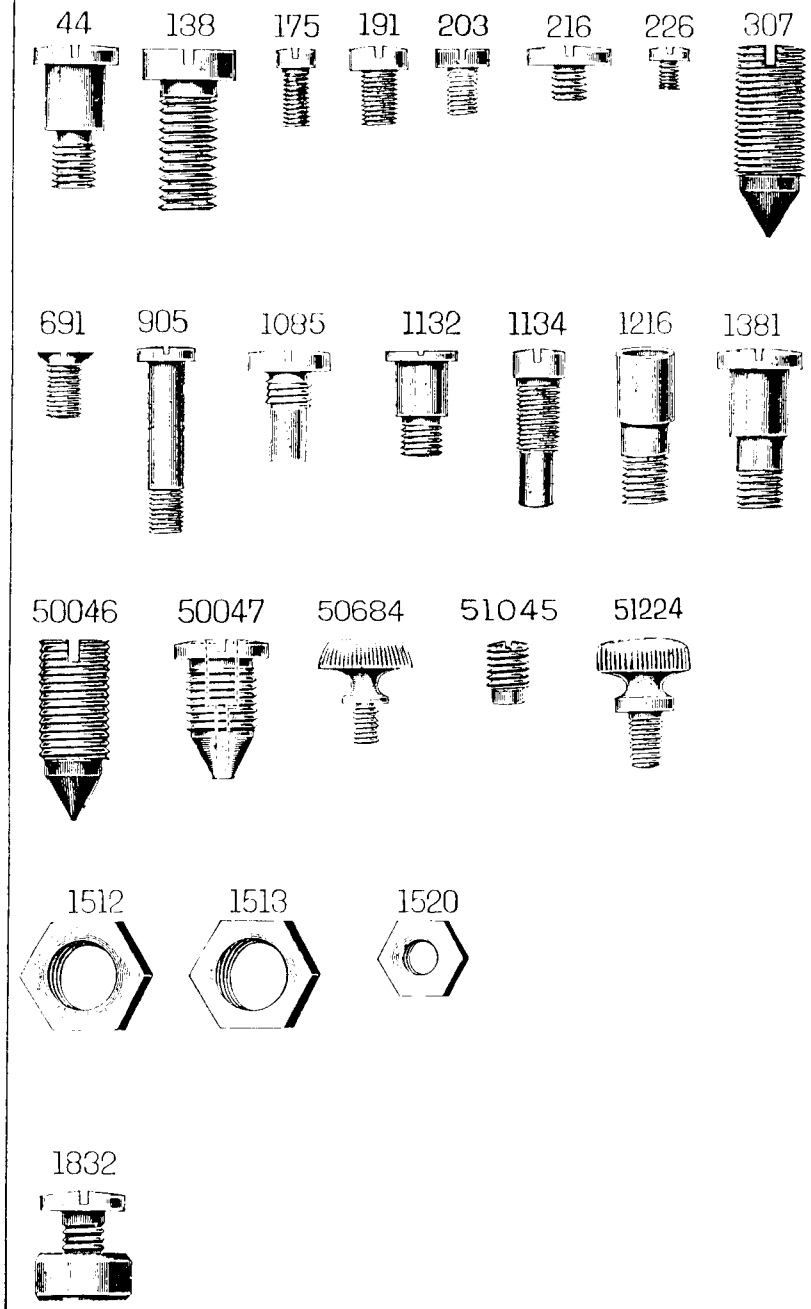
44
138
175
191
203
216
226
307
691
905
1085
1132
1134
1216
1381
50046
50047
50684
51045
51224
1512
1513
1520
1832

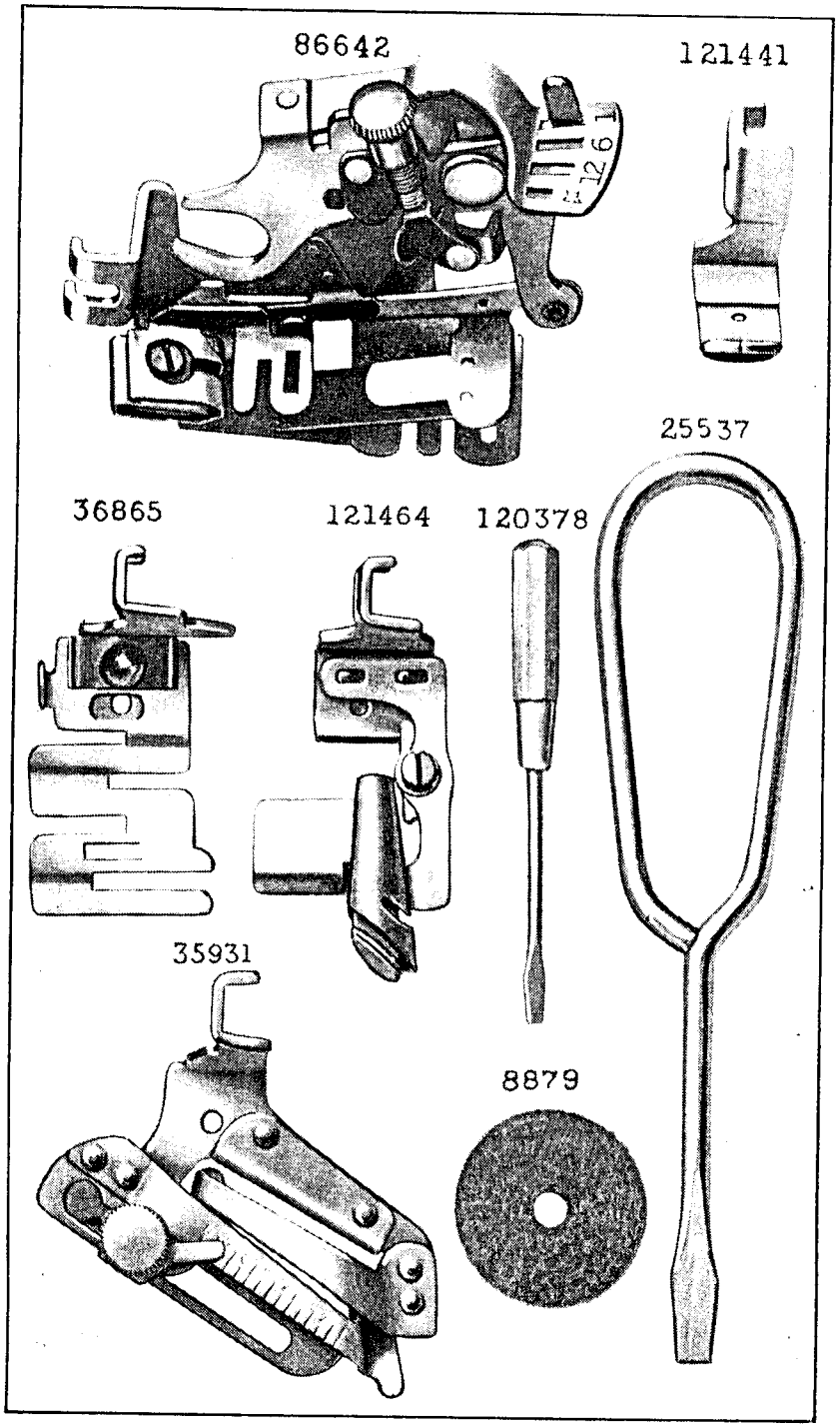
86642
121441
25537
36865
121464
120378
35931
8879

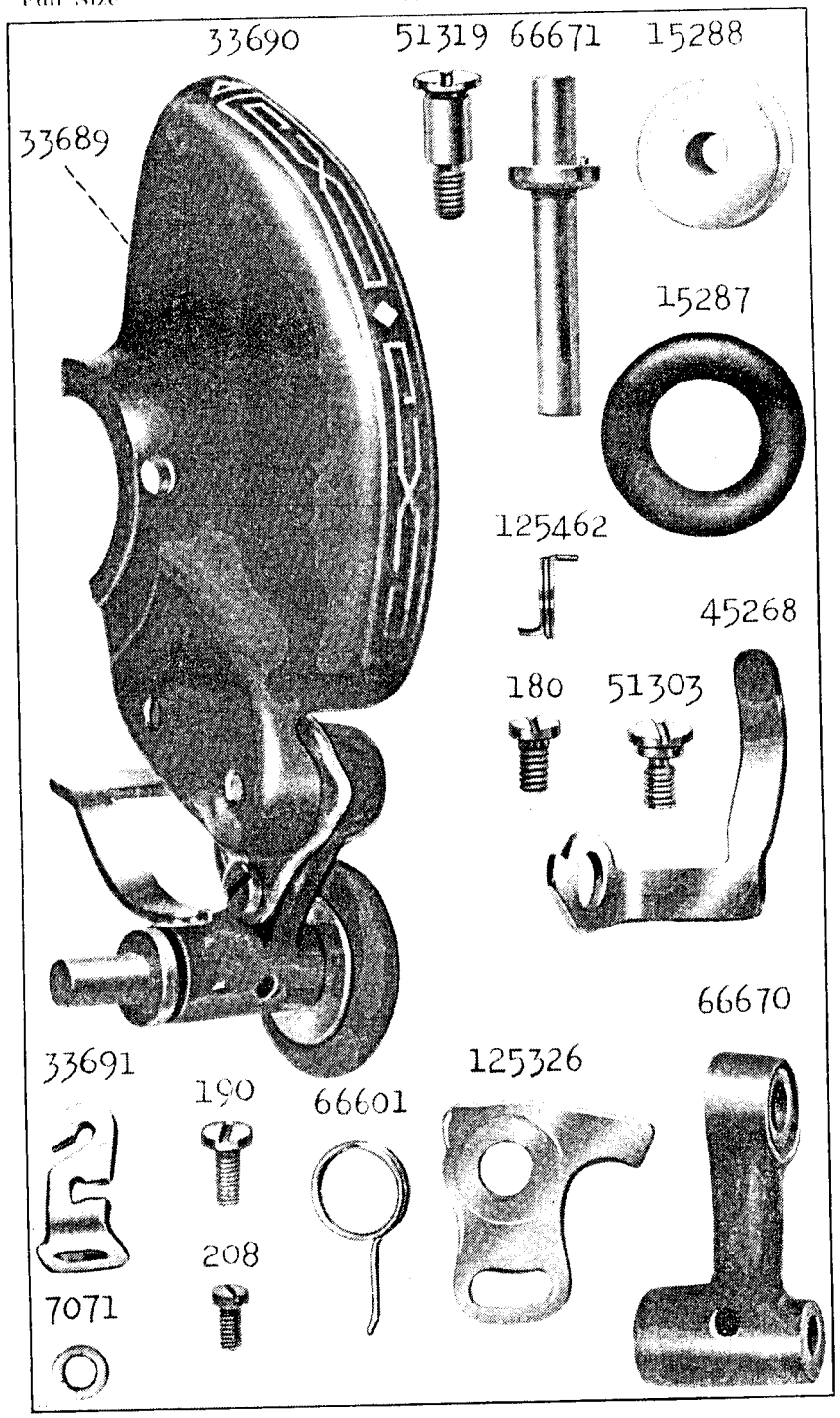
33690
51319
66671
15288
33689
15287
125462
45268
180
51303
66670
33691
190
66601
125326
208
7071

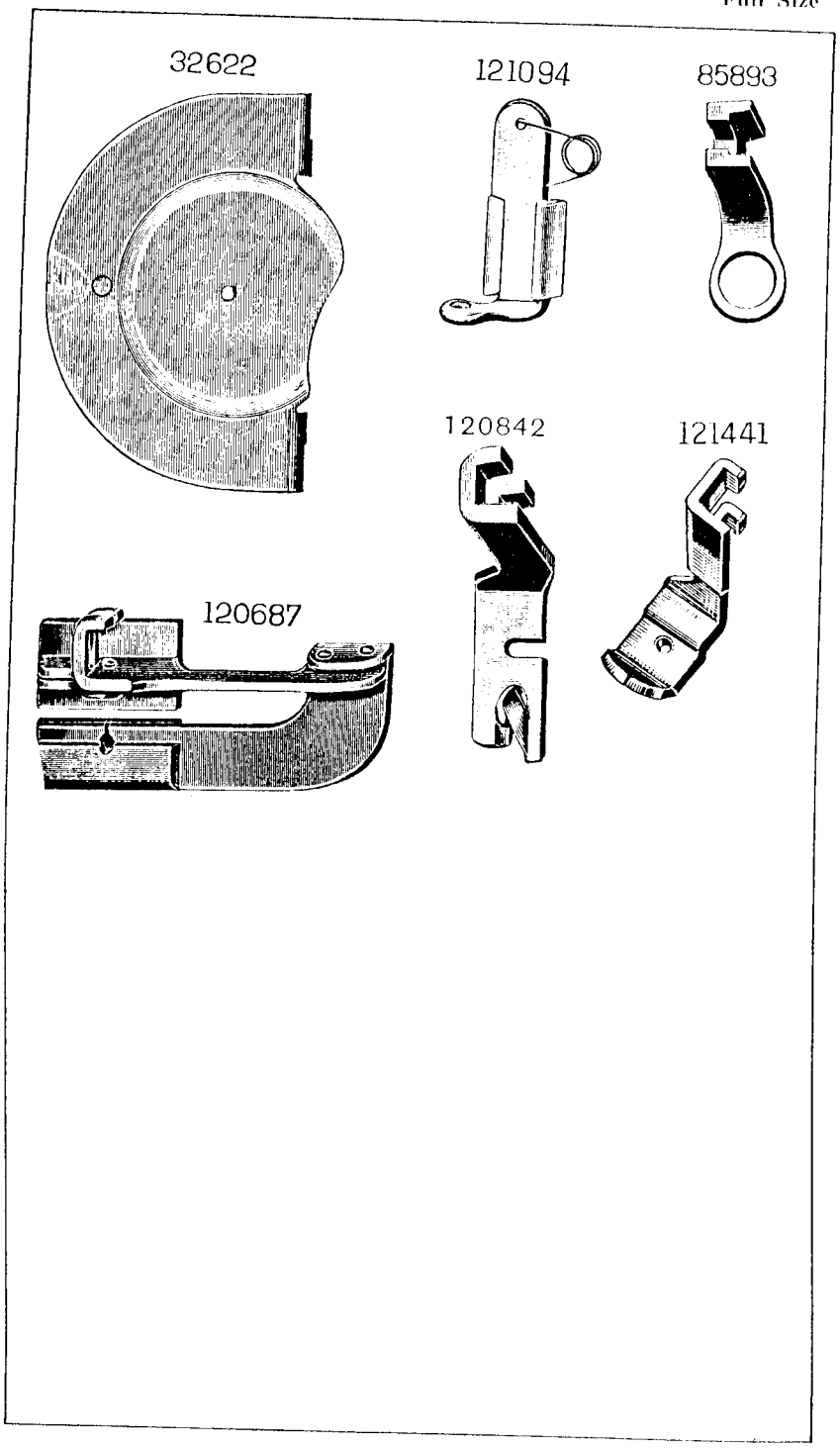
32622
121094
85893
120842
121441
120687

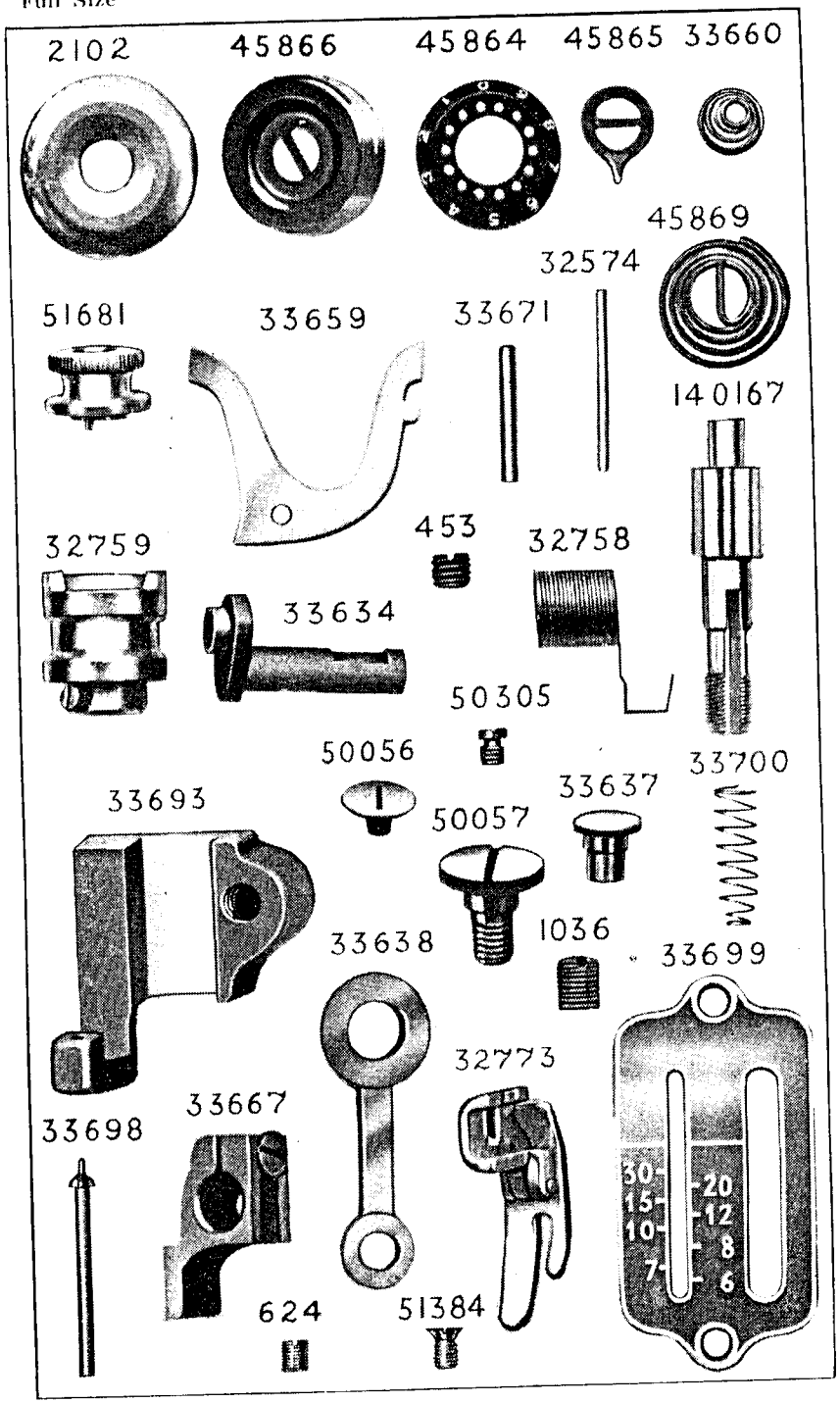
2102
45866
45864
45865
33660
45869
32574
51681
33659
33671
140167
32759
453
32758
33634
50305
50056
33700
33693
33637
50057
33638
1036
33699
32773
33698
33667
624
51384
30
15
10
7
20
12
8
6

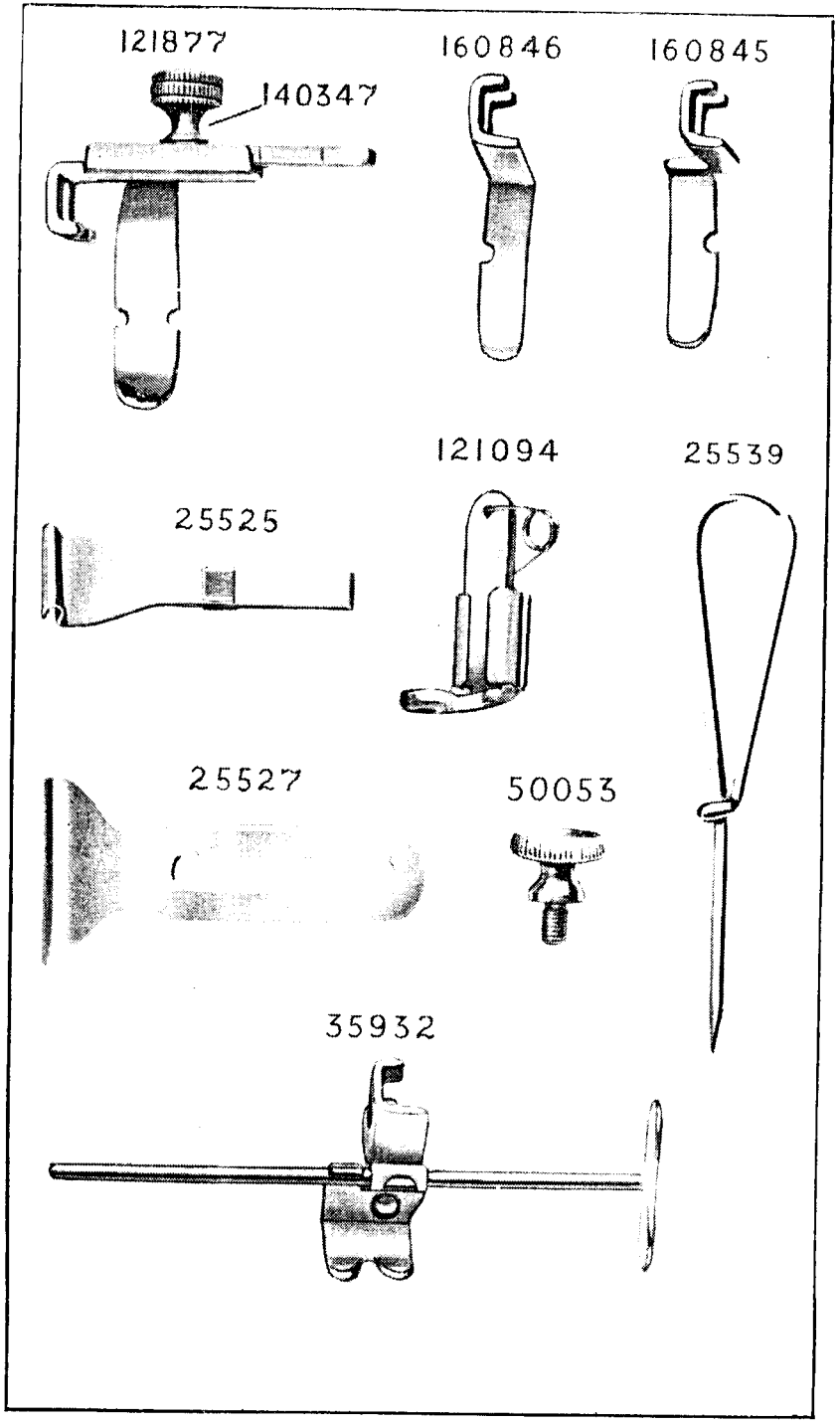

ILLUSTRATED

LIST OF PARTS

FOR

Nos. 99K26 to 99K28 Machines

CONTENTS

	Page
Attachments and Accessories	31
Bobbin Winder	30
Hand Attachment	34
Machine Parts	25
Numerical List of Parts	37

INSTRUCTIONS FOR ORDERING

In ordering from this List, the prefix and affix letters with the part number MUST BE quoted exactly as they are shown in the first column.

A number always indicates the same part in whatever List it may appear, or for whatever machine.

The affix letters (where shown) indicate the style of finish, as follows:—

- A. Hardened, Polished, Nickel Plated and Buffed.
- A.A. Buffed and Chromium Plated.
- A.B. Hardened, Polished, Buffed and Chromium Plated.
- A.C. Brown Baking Enamel Finish.
- A.D. Grey Baking Enamel Finish.
- A.E. Hardened, Bright Rumbled and Nickel Plated.
- A.F. Hardened, Bright Rumbled and Nickel Plated, Bright Rumbled and Chromium Plated.
- A.J. Polished, Nickel Plated and Chromium Plated.
- A.K. Hardened, Polished, Nickel Plated and Chromium Plated.
- A.L. Heat Treated for Toughness.
- A.L.D. Heat Treated for Toughness and Polished.
- A.L.X. Heat Treated for Toughness and Black Oxide.
- A.M. Beige Synthetic Enamel.
- A.N. Red Synthetic Enamel Finish.
- A.P. Blue Synthetic Enamel Finish.
- A.P.P. Grey Wrinkle Finish.
- A.R. Beige Wrinkle Finish.
- A.S. Black Moulded Phenolic.
- A.T. Beige Moulded Phenolic.
- A.U. Brown Moulded Phenolic.
- A.V. Black Synthetic Enamel.
- A.W. Hardened and Flame Coated with Tungsten Carbide.
- A.X. Grey Dipping Enamel.
- B. Polished, Nickel Plated and Buffed.
- C. Hardened only.
- C.R. Hardened and Phosphoric Treated.
- D. Polished only.
- E. Soft, not Polished.
- F. Hardened and Polished.
- F.J. Hardened, Polished and Nickel Plated.
- G. Bright Rumbled and Nickel Plated.
- H. Blued.
- J. Nickel Plated only.
- K. Hardened and Nickel Plated.
- L. Brass Plated.
- M. Oxidized.
- N. Japanned, Dull.
- P. Japanned, Bright.
- P.P. Wrinkle Finish.
- R. Phosphoric Treated.
- S. Cadmium Plated.
- T. Copper Plated.
- T.A. Hardened, Polished, Copper and Nickel Plated and Buffed.
- T.B. Copper and Nickel Plated and Polished.
- T.J. Copper and Nickel Plated only.
- T.K. Hardened, Copper and Nickel Plated.
- T.L. Copper and Brass Plated.
- T.M. Copper Plated and Oxidized.
- U. Zinc Plated.
- V. Silver Plated.
- W. Polished and Nickel Plated.
- X. Black Oxide for Iron and Steel.
- X.C. Hardened and Black Oxide for Iron and Steel.
- Y. Black Nickel Plated only.
- Z. Chromium Plated.
- Z.A. Hardened, Polished, Nickel Plated, Buffed and Chromium Plated.
- Z.B. Polished, Nickel Plated, Buffed and Chromium Plated.
- Z.C. Hardened and Chromium Plated.
- Z.D. Polished and Chromium Plated.
- Z.G. Bright Rumbled, Nickel Plated, Bright Rumbled and Chromium Plated.
- Z.J. Nickel and Chromium Plated.
- Z.T. Copper and Chromium Plated.

Parts marked with an asterisk(*) are furnished only when the repairs are made at Factory.

PARTS COMPLETE

FOR

CLASS 99K MACHINES

(Nos. 99K29 to 99K31)

Lock Stitch ; Horizontal Oscillating Hook ; Stationary Bobbin Case ; Link Take-up ; Reversible Drop Feed ; for Family Use

No.	Plate	
*33692		**Arm** with 148za and 32503 ... ...
2002	2396	" Dowel Pin (2) ... ...
1389	2396	" " " (for repairs only) ... ...
33602r	892	" Rock Shaft with 905e ... ...
33661		" " " 33602r with 1216c and 1520j ... ...
905e	2400	" " " Adjusting Screw ... ...
50046c	2400	" " " Screw Centre (lower) ... ...
33666		" " " " " (") 50046c with 1512r ...
1512r	2400	" " " " " (") Nut ... ...
50047c	2400	" " " " " (upper) ... ...
138e	2400	" Screw (3) ... ...
33603	892	" Shaft ... ...
33662		" " 33603 with 32503 and 33615 ... ...
32503	2396	" " Bushing ... ...
148za	2396	" " " Set Screw ... ...
2007zb	895	" Spool Pin ... ...
*33681p		**Bed** ... ...
256zb	2393	**Clamp Stop Motion Clamp Screw** ... ...
248za	2393	" " " " Stop Screw ... ...
2020	2393	" " " " Washer ... ...
32618	2393	" " " Flanged Bushing ... ...
1148al	2393	" " " " " Set Screw ... ...
~~32619~~7b		**Clamp Stop Motion,** complete, Nos. 248za, 256zb, 1148al, 2020 and 32618 ... ...
*33663zb		**Face Plate** ... ...
33654zb	892	" " 33663zb with 125423zb ... ...
203zb	2400	" " Screw ... ...
125422zb	2396	" " Thread Guard ... ...
125423zb	2396	" " " " 125422zb with 125424zb ... ...
125424zb	2396	" " " " Rivet ... ...
50684zb	2400	" " Thumb Screw ... ...

No.	Plate	
32507r	2393	**Feed Bar** with 1944 ... ...
1944	2393	" " Roller and Stud ... ...
315c	2393	" " Screw Centre (2) ... ...
15445		" " " " 315c with 1519r (2) ... ...
1519r	2393	" " " " Nut (2) ... ...
32600	895	**Feed Dog** ... ...
191c	2400	" " Screw ... ...
33609r	892	**Feed Forked Connection** with 175j ... ...
33664		" " " 33609r with 1832 ... ...
175j	2400	" " " Adjusting Screw ... ...
1381c	2400	" " " Hinge Screw (eccentric) ... ...
1520r	2400	" " " " " Nut ... ...
1832	2400	" " " Roller with 1085e ... ...
1085e	2400	" " " " Screw Stud ... ...
*32510r	2393	**Feed Raising Bar** with 1944 ... ...
1301c	2393	" " " Hinge Screw ... ...
1944	2393	" " " Roller and Stud ... ...
33693	2718	**Feed Regulator** ... ...
8217	2393	" " Friction Washer ... ...
51295c	2393	" " Hinge Screw ... ...
51771zb	2396	" " Thumb Nut ... ...
33694		" " " " 51771zb with 33695 and 33701 ...
33695	2396	" " " " Screw Stud ... ...
33701	2396	" " " " " " Friction Spring ...
33611r	892	**Feed Rock Shaft** ... ...
307c	2400	" " " Screw Centre (2) ... ...
56814		" " " " " 307c with 1513r ... ...
1513r	2400	" " " " " Nut (2) ... ...
51045al	2400	**Machine Hinge Connection Set Screw** (2) ... ...
32672	1722	**Hand Wheel,** 3¼″ pulley, for 99K31 Machine ... ...
15282	892	" " 2¼″ pulley, for 99K29 and 99K30 Machines ...
33655	895	**Needle Bar** with 32519 ... ...
33613	895	" " Connecting Link ... ...
33678		" " " " 33613 with 33673 ... ...
33673	2393	" " " Stud with 1353al ... ...
1353al	2393	" " " " Set Screw ... ...
33615	895	" " Crank with 1036al and 1134al ... ...
1134al	2400	" " " Position Screw ... ...
33657	2393	" " Hole Plug ... ...
2054zb	2393	**Needle Clamp** with 140545za ... ...
140545za	1160	" " Thumb Screw ... ...
32519	2393	" Stop Pin ... ...

No.	Plate	
32520	2394	**Oscillating Hook** ... ...
32626		" " 32520 with 32590 ... ...
32656	2394	" " Bell Crank ... ...
50561c	2394	" " " " Hinge Screw ... ...
32522	2394	" " Bobbin ... ...
32590	2394	" " " Case with 1172f, 1173d and 32567 ...
32661	2394	" " " " Cushion Spring ... ...
662j	2394	" " " " " " Screw ...
32659	2394	" " " " Position Bracket ... ...
32662	2394	" " " " " " Hinge Stud ...
50611j	2394	" " " " " " " " Set Screw
32663	2394	" " " " " " Latch ...
50579j	2394	" " " " " " " Screw
32598	2394	" " " " " " Oil Pad (felt)
32599	2394	" " " " " " " " Holder
32660		**Oscillating Hook** Bobbin Case Position Bracket, complete, Nos. 662j, 32528, 32598, 32599, 32659, 32661 to 32664, 50579j and 50580e ... ...
1172f	2394	**Oscillating Hook** Bobbin Case Tension Regulating Screw ...
32567	2394	" " " " " Spring ... ...
1173d	2394	" " " " " " Screw ...
32664	2394	" " " Ejector ... ...
50580e	2394	" " " " Hinge Screw Stud ...
32528	2394	" " " " Spring ... ...
32529r	895	" " Connecting Link ... ...
1132c	2400	" " " " Hinge Screw ... ...
32594r	2394	" " Crank with 1485r ... ...
1485r	2394	" " " Clamping Screw ... ...
33618r	892	" " Pitman with two 175r ... ...
175r	2400	" " " Adjusting Screw ... ...
41c	2400	" " " Screw Stud (left) ... ...
1216c	2400	" " " " " (right) ... ...
216c	2400	" " " " " (") Cap Screw ...
1520j	2400	" " " " " (") Nut ... ...
32569zb	895	" " Slide ... ...
32570	895	" " " Friction Spring ... ...
226j	2400	" " " " " Screw ... ...
33619	895	**Presser Bar** (hollow) ... ...
33620za	895	" " Lifter ... ...
33621	2396	" " " Hinge Pin ... ...
33667e	2718	" " Lifting Bracket with 50052e ... ...
33669e		" " " " 33667e with 33676zb ... ...
33677		" " " " 33669e with 240e, 33674 and 33675
50052e	2393	" " " " Clamping Screw ... ...
33623	2396	" " Spring ... ...
33672		" " " 33623 with 33624 ... ...

No.	Plate	
45329zb	—	**Presser Foot** Hinge Pin ... ...
32772zb		" " Plate ... ...
32774zb		" " Shank ... ...
32773zb	2718	**Presser Foot** (hinged), complete, Nos. 32772zb, 32774zb and 45329zb
51224b	2400	" " Thumb Screw ... ...
50054zb	2396	**Pressure Regulating Thumb Screw** ... ...
33624	2396	" " " " Extension Pin ...
33676zb	2393	**Slack Thread Regulator** ... ...
33698	2718	**Stitch Indicator** ... ...
33699	2718	" " Plate ... ...
51384e	2718	" " " Screw (2) ... ...
33700	2718	" " Spring ... ...
2102	2718	**Tension Disc** ... ...
45866	2718	" Indicator ... ...
45864	2718	" " Flange ... ...
45865	2718	" " " Stop Washer ... ...
51681zb	2718	" Regulating Thumb Nut ... ...
33659	2718	" Releasing Lever... ... ...
33671	2718	" " " Hinge Pin ... ...
33660	2718	" " " Spring ... ...
32574	2718	" " Pin ... ...
45869	2718	" Spring ... ...
140167zb	2718	" Stud ... ...
45870		" " 140167zb with 51681zb ... ...
50305c	2718	" " Set Screw ... ...
32757		**Tension** (graduated), complete Nos. 32574, 32758, 32759, 45864 to 45866, 45869, 45870 and two 2102 ... ...
26075e	2393	**Thread Cutter and Holder** ... ...
33632zb	2393	**Thread Guard** (front of arm) ... ...
237zb	2393	" " (" " ") Set Screw ... ...
8422zb	2393	" " (head of arm) ... ...
33634	2718	" Take-up Crank ... ...
1036al	2718	" " " Set Screw ... ...
33635za	895	" " Lever ... ...
33636za		" " " complete, Nos. 33635za, 33637 and 33638
33679za		" " " 33636za with 33634, 33678, 50056e and 50057c
50056e	2718	" " " Cap Screw... ... ...
33637	2718	" " " Hinge Stud ... ...
624al	2718	" " " " " Set Screw ... ...

No.	Plate	
33638	2718	**Thread** Take-up Lever Link ... ...
50057c	2718	" " " " Hinge Screw ... ...
32758	2718	" " Spring ... ...
32759	2718	" " " Regulator with 50305c ... ...
453al	2718	" " " " Set Screw ... ...
32602za	895	**Throat Plate** for 32600 ... ...
691za	2400	" " Screw (2) ... ...
33674	2394	**Timing Gauge** (for setting the height of needle Bar and timing the Oscillating Hook)
240e	2394	" " Screw ... ...
33675	2394	" " " Washer ... ...
94013		**Drip Pan** (for Machine on Cover Set) ... ...

Bobbin Winder (Universal)

No.	Plate	
33689	2646	Bracket (belt cover) ... ...
180zb	2646	" Screw ... ...
66670	2646	Frame ... ...
45297		" 66670 with 15288 and 66671 ... ...
51319zb	2646	" Hinge Screw ... ...
66601	2646	" Spring ... ...
15287	2646	Friction Ring (rubber) ... ...
15288	2646	Pulley ... ...
66671	2646	Spindle... ... ...
45268	2646	Stop Latch ... ...
51303zb	2646	" " Hinge Screw ... ...
125462	2646	" " Spring ... ...
125326	2646	Tripping Arm ... ...
190zb	2646	" " Screw ... ...
33690	2646	**Bobbin Winder,** complete, Nos. 190zb, 15287, 33689, 45268, 45297, 51303zb, 51319zb, 66601, 125326 and 125462 ...
33691	2646	Thread Guide ... ...
208zb	2646	" " Screw ... ...
~~7071~~	2646	" " " Washer ... ...

Attachments

ATTACHMENT SET

(Supplied with Machine)

No.	Plate	
121464	2574	Binder ... ...
36865	2574	Edge Stitcher ... ...
121441	2574	Gathering Foot (double toe) ... ...
35931	2574	Hemmer (adjustable) ... ...
15 × 1		Needles (6) ... ...
86642	2574	Ruffler ... ...
25537	2574	Screw Driver (machine) ... ...
120378	2574	" " (bobbin case) ... ...
8879	2574	Spool Pin Washer (cloth) ... ...
160810		Set of Attachments, complete, Nos. 25537, 35931, 36865, 86642, 120378, 121441, 121464, two 8879 and six needles... ...
120842	2649	Hemmer (foot) $\frac{5}{64}''$ hem ... ...
32522	2394	Oscillating Hook Bobbin (4) ... ...
120861		Tin of Oil (3 oz.) ... ...

ATTACHMENTS WHICH MAY BE PURCHASED SEPARATELY

25525	2719	Bias Gauge ... ...
25527b	2719	Cloth Guide ... ...
50053b	2719	" " and Under Braider Thumb Screw ... ...
120687	2649	Imitation Hemstitching Attachment with Yielding Presser Plate
35932	2719	Quilter ... ...
121170	909	Ruffler Shirring Plate ... ...
25539	2719	Stiletto... ... ...
36583	1160	Tucker ... ...
121547	909	Under Braider ... ...

CORDING FEET

FOR STITCHING ON EDGE, INSERTING CORD AND SLIDE FASTENER WORK

No.	Plate	
160845	2719	Cording Foot (left toe) ... ...
160846	2719	" " (right toe) ... ...

PRESSER FOOT

FOR CORDING AND SLIDE FASTENER WORK

No.	Plate	
121875		Presser Foot ... ...
140347w	2719	" " Adjusting Thumb Screw ... ...
121876		" " Body ... ...
121877	2719	Presser Foot (adjustable) for sewing on the right or left side of the needle, complete, Nos. 121875, 121876 and 140347w ...

NEEDLE THREADER

No.	Plate	
121632	—	Needle Threader (Universal) ... ...

DARNING AND EMBROIDERY

No.	Plate	
86493	1160	Darning Presser Needle Clamp with 140545k ... ...
86494	1160	" " " " Stripper Spring ... ...
86495	1160	" " " " " " Eyelet ...
140545k	1160	" " " " Thumb Screw ... ...
86496	1160	Darning Presser, complete, Nos. 86493 to 86495 ... ...
121094	2649	Spring Darning Foot ... ...
85893	2649	Embroidery Foot ... ...
32622	2649	Feed Cover Plate ... ...

EMBROIDERY HOOPS (Plain)

(BIRCH)

No	Plate	
87586		Round, $5\frac{5}{8}''$ diam. $\times 7^{m}_{m}$ high ... ...
96416		" 7″ " $\times 7^{m}_{m}$ " ... ...
87589	1221	" 8″ " $\times 7^{m}_{m}$ " ... ...
87593		" 10″ " $\times \frac{7}{16}''$ " ... ...
87595		" 12″ " $\times \frac{1}{2}''$ " ... ...
96422	1221	Oval, $9'' \times 4\frac{1}{2}'' \times 7^{m}_{m}$ high ... ...
87597	—	" $12'' \times 5\frac{1}{2}'' \times 7^{m}_{m}$ " ... ...

EMBROIDERY HOOPS (with Clamp)

(BIRCH)

No.	Plate	
96417		Round, $5\frac{5}{8}''$ diam. $\times 7^{m}_{m}$ high, with *SS*528j, *NN*95j, two 96425 and four 96427
96418		" 7″ " $\times 7^{m}_{m}$ " " *SS*528j, *NN*95j, two 96426 and four 96427
96419		" 8″ " $\times 7^{m}_{m}$ " " *SS*528j, *NN*95j, two 96426 and four 96427
96420		" 10″ " $\times \frac{7}{16}''$ " " *SS*528j, *NN*95j, two 96426 and four 96427
96421		" 12″ " $\times \frac{1}{2}''$ " " *SS*528j, *NN*95j, two 96844 and four 96845
96423		Oval, $9'' \times 4\frac{1}{2}'' \times 7^{m}_{m}$ high, with *SS*528j, *NN*95j, 96425, 96426 and four 96427
96424		" $12'' \times 5\frac{1}{2}'' \times 7^{m}_{m}$ " " *SS*528j, *NN*95j, 96425, 96426 and four 96427
96425	2399	Clamping Bracket for 96417, 96423 and 96424 ... ...
96426	2399	" " " 96418 to 96420, 96423 and 96424 ...
96844	2399	" " " 96421 ... ...
96427	2399	" " Rivet for 96417 to 96420, 96423 and 96424 ...
96845	2399	" " " " 96421 ... ...
*SS*528j	2399	" " Screw ... ...
*NN*95j	2399	" " " Nut ... ...

HAND ATTACHMENT

(For 99K30 Machine)

No.	Plate	
94050	2284	Body ... ...
94027	2284	" Bracket ... ...
183c	2114	" " Screw ... ...
94028	2114	Crank Handle (wood) ... ...
94029b	2114	" " Spindle ... ...
94030b	2114	" " " Flange (loose) ... ...
94069	2114	" Hinge Pin ... ...
94031a	2284	" Lever ... ...
94032	2114	" " Lock Pin ... ...
94033b	2114	" " " " Head ... ...
55531	2114	" " " " Spring ... ...
94034b		" complete, Nos. 94028, 94029b, 94030b and 94031a ...
94046	2114	Driver ... ...
94070		" 94046 with 80028 and 94048 ...
94036	2114	" Finger ... ...
94039	2114	" " Driving Pad (raw-hide) ... ...
94040	2114	" " " " Plate ... ...
SS567c	2114	" " " " and Plate Binding Screw ... ...
94041	...	" " 94036 with SS567c, 94039 and 94040 ...
94044	2114	" " Hinge Pin ... ...
94037	2114	" " Latch ... ...
SS565c	2114	" " " Screw Stud ... ...
94038	2114	" " " Spring ... ...
94051b	2284	Gear with 55531, 94032 and 94033b ... ...
94016	2284	" Cover ... ...
399a	2114	" " Screw ... ...
SS599f	2114	" Screw Stud ... ...
94048	2114	Pinion ... ...
80028	2114	" Dowel Pin ... ...
SS600f	2114	" Screw Stud (eccentric) ... ...
94052b	2284	**Hand Attachment,** complete, Nos. SS565c, SS566c, SS599f, SS600f, 94016, 94027, 94034b, 94037, 94038, 94041, 94044, 94050, 94051b, 94069, 94070, two each 183c and 399a ...
SS566c	2114	Hand Attachment Screw ... ...